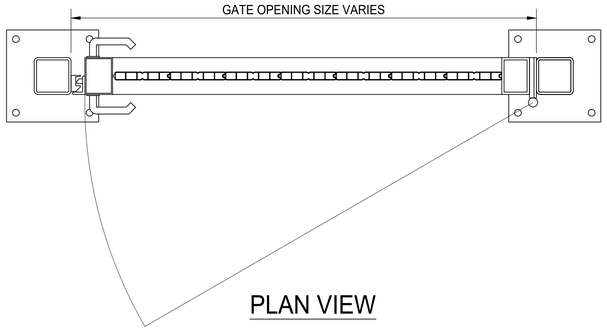

PLAN VIEW

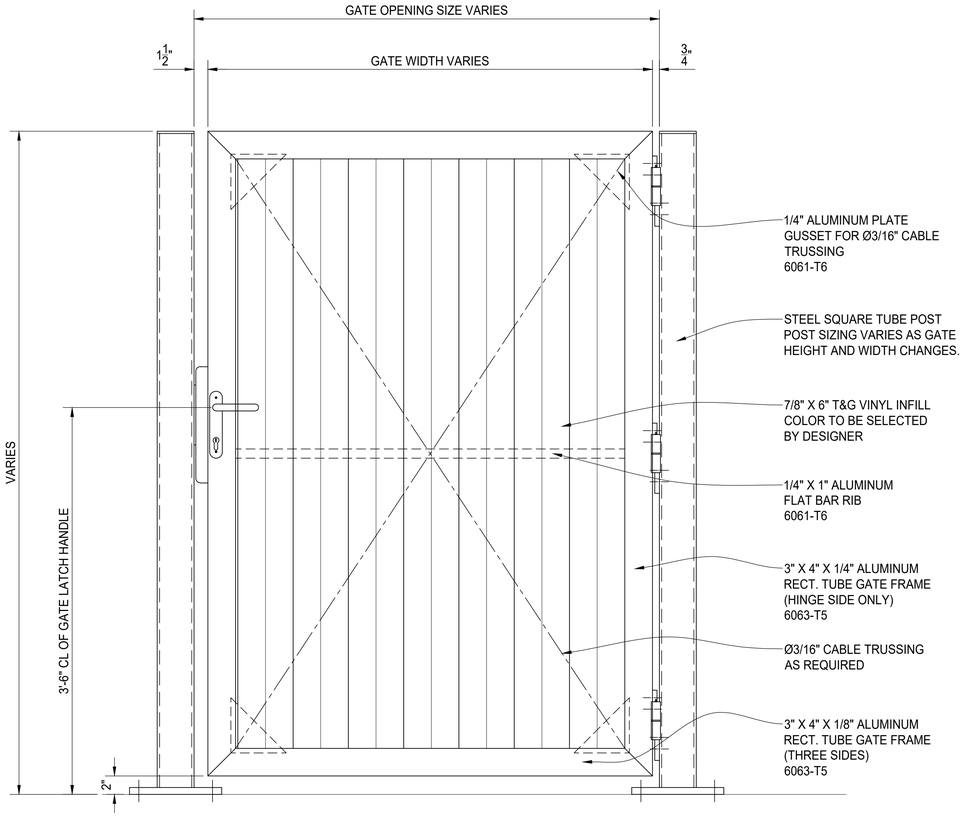

GATE ELEVATION

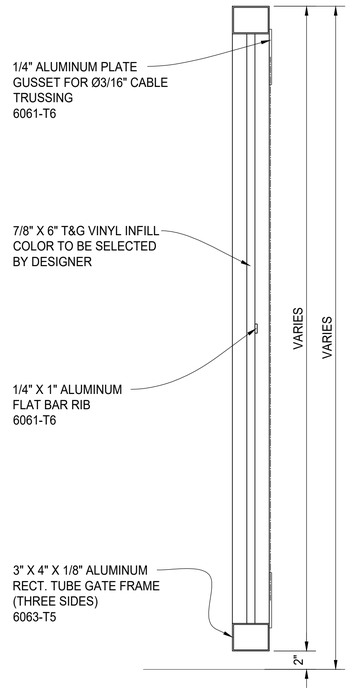

TYPICAL GATE SECTION

REV	DESCRIPTION	DATE
.	.	.
.	.	.

PalmSHIELD

PALMSHIELD ELITE - PATENT PENDING
SOLID VINYL PLANK S.S. GATE
PLAN, ELEVATION AND SECTION VIEWS
FINISH TO BE DETERMINED

PALMSHIELD PROJECT #:	PS24-0001			CLIENT PROJECT #:	.				
REFERENCE JOB #:	.								
CHKD BY:	AF	TL	SCALE: N.T.S.	DRAWN BY:	PB	DATE: 06/14/2024	REV .	SHEET #	01

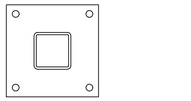

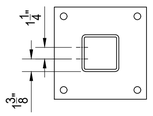

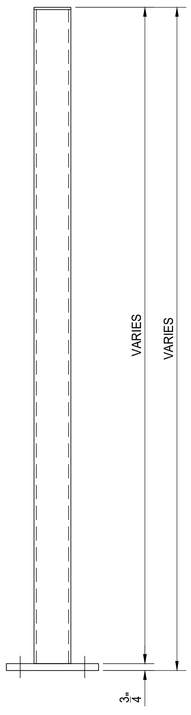

LATCH POST DETAIL

POST SIZE VARIES UPON
GATE HEIGHT & WIDTH

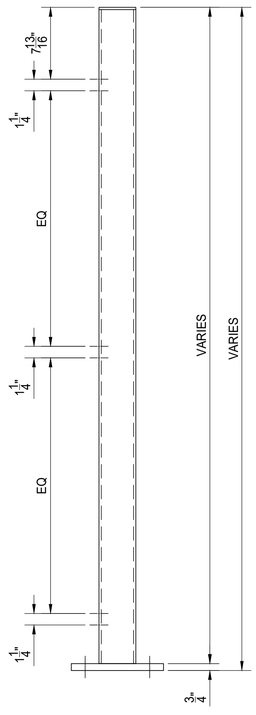

HINGE POST DETAIL

POST SIZE VARIES UPON
GATE HEIGHT & WIDTH

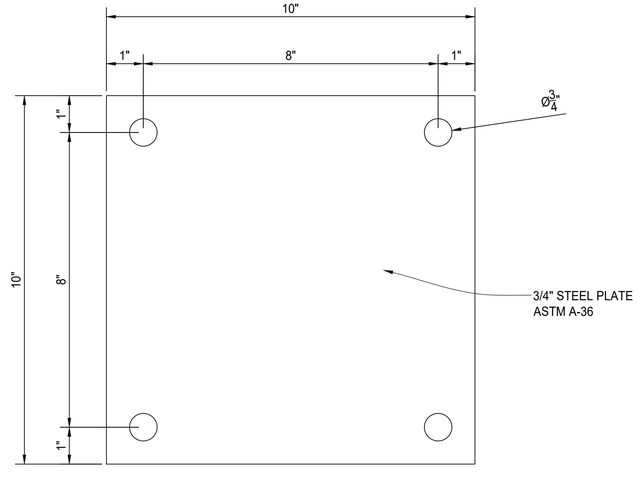

BASE PLATE DETAIL

REV	DESCRIPTION	DATE
.	.	.
.	.	.

PalmSHIELD

PALMSHIELD ELITE - PATENT PENDING
SINGLE SWING GATE
POST & BASE PLATE DETAILS
FINISH TO BE DETERMINED

PALMSHIELD PROJECT #:	PS25-0006		CLIENT PROJECT #:	.			
REFERENCE JOB #:	.						
CHKD BY:	AF	TL	SCALE: N.T.S.	DRAWN BY:	PB	DATE: 10/15/2025	REV .	SHEET # 02

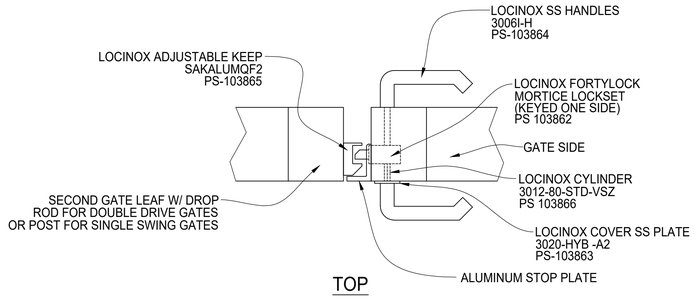

TOP

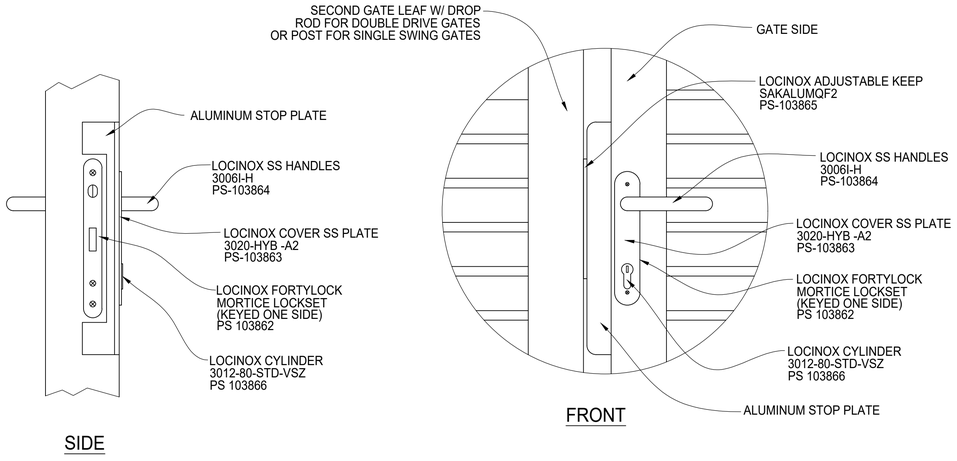

LATCH AND LOCK DETAIL

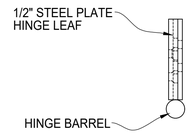

TOP

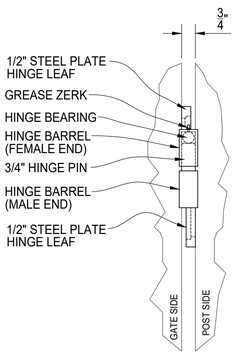

FRONT

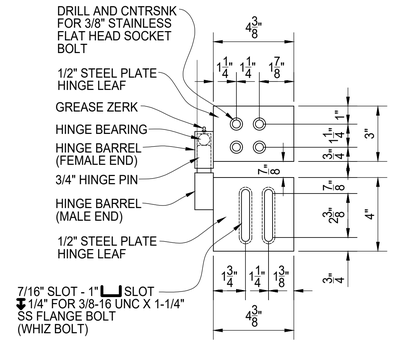

SIDE

GORILLA HINGE 3000 DETAIL

ZERK END IS FEMALE AND BOLTS TO GATE FRAME.
MALE END IS TO BE BOLTED TO GATE POST.
MALE END HINGE LEAF PLATE IS SLOTTED TO ALLOW FOR 3/4" ADJUSTMENT UP OR DOWN FOR PROPER ALIGNMENT.
A "STOP" CAN BE FIELD WELDED TO THE GATE POST ABOVE THE HINGE TO PREVENT LIFT OFF.
GORILLA HINGES ARE PRE-GREASED, BUT SHOULD BE GREASED AGAIN UPON INSTALLATION AND PERIODICALLY TO MAINTAIN PROPER FUNCTION.

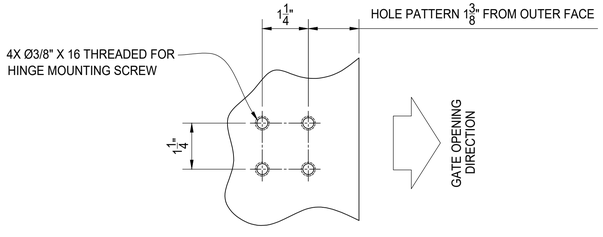

TYPICAL HINGE MOUNT HOLE PATTERN (POST)

POST OUTER FACE IS IN DIRECTION OF GATE SWING

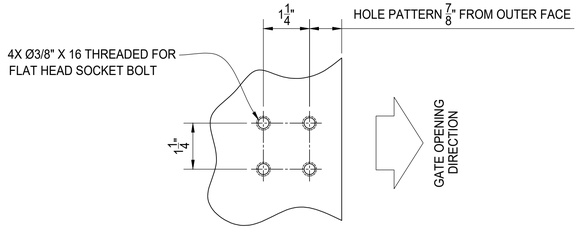

TYPICAL HINGE MOUNT HOLE PATTERN (GATE FRAME)

POST OUTER FACE IS IN DIRECTION OF GATE SWING

REV	DESCRIPTION	DATE
.	.	.
.	.	.

PalmSHIELD

PALMSHIELD ELITE - PATENT PENDING
SINGLE SWING GATE
GATE HARDWARE DETAILS
FINISH TO BE DETERMINED

PALMSHIELD PROJECT #:	PS25-0006			CLIENT PROJECT #:	.		
REFERENCE JOB #:	.			RETURN BY DATE:	.		
CHKD BY:	AF	TL	SCALE: 3" = 1'-0"	DRAWN BY:	PB	DATE: 10/15/2025	REV . SHEET # 03