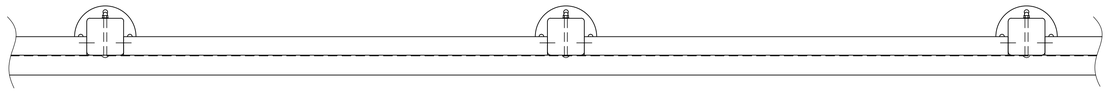

PLAN VIEW

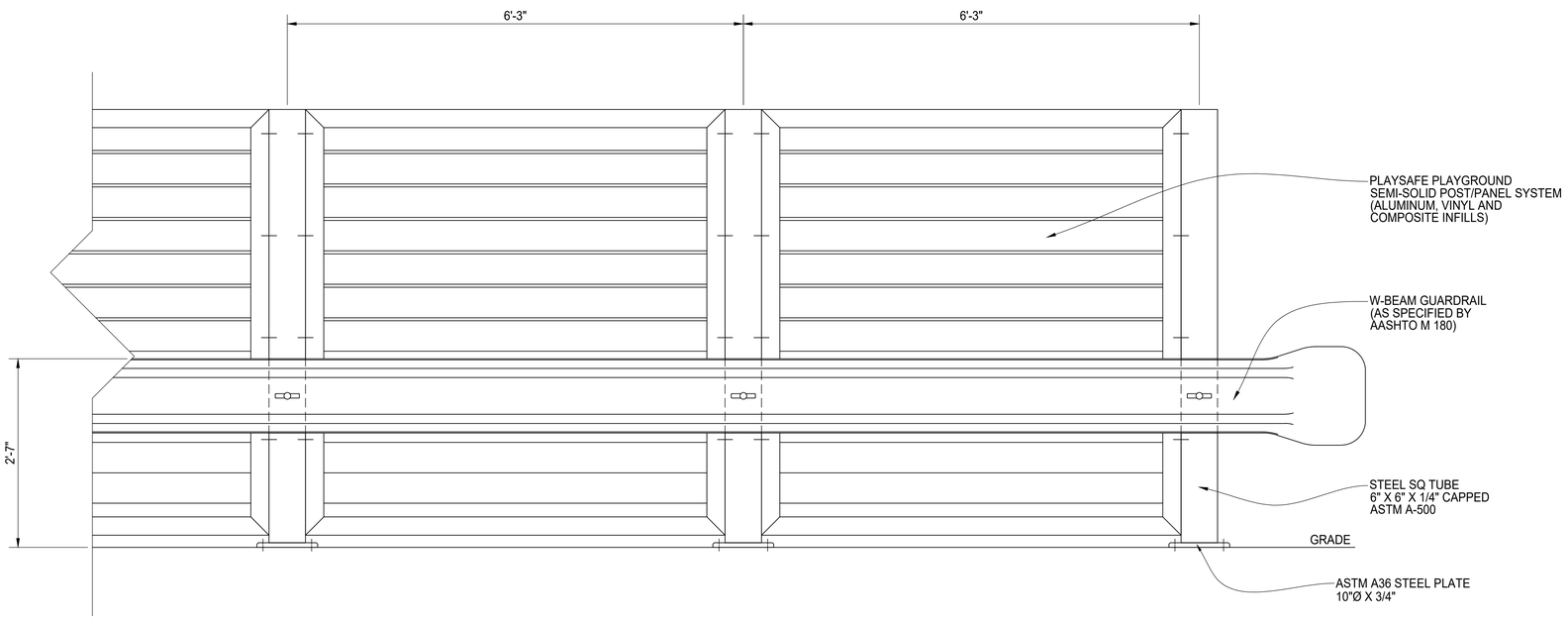

GUARDRAIL ELEVATION

BILL OF MATERIALS

QTY	MK	DESCRIPTION	LENGTH	NOTES	FINISH
.	.		.	.	.

	START	STOP	ESTIMATED	ACTUAL	INITIALS
CUT			.		
ROLL			.		
WELD			.		
GRIND			.		
OTHER			.		
OTHER			.		
TOTAL			.		

REV	DESCRIPTION	DATE
.	.	.
.	.	.

PlamSHIELD

PLAYSAFE
PLAYGROUND SCREENING
VEHICLE SAFETY GUARDRAIL
ELEVATION VIEW

AMERICAN FENCE PROJECT #: .			CLIENT PROJECT #: .		
REFERENCE JOB #: .					
CHKD BY: . .	SCALE: N.T.S.	DRAWN BY: PB	DATE: 07/12/2022	REV .	SHEET # 01