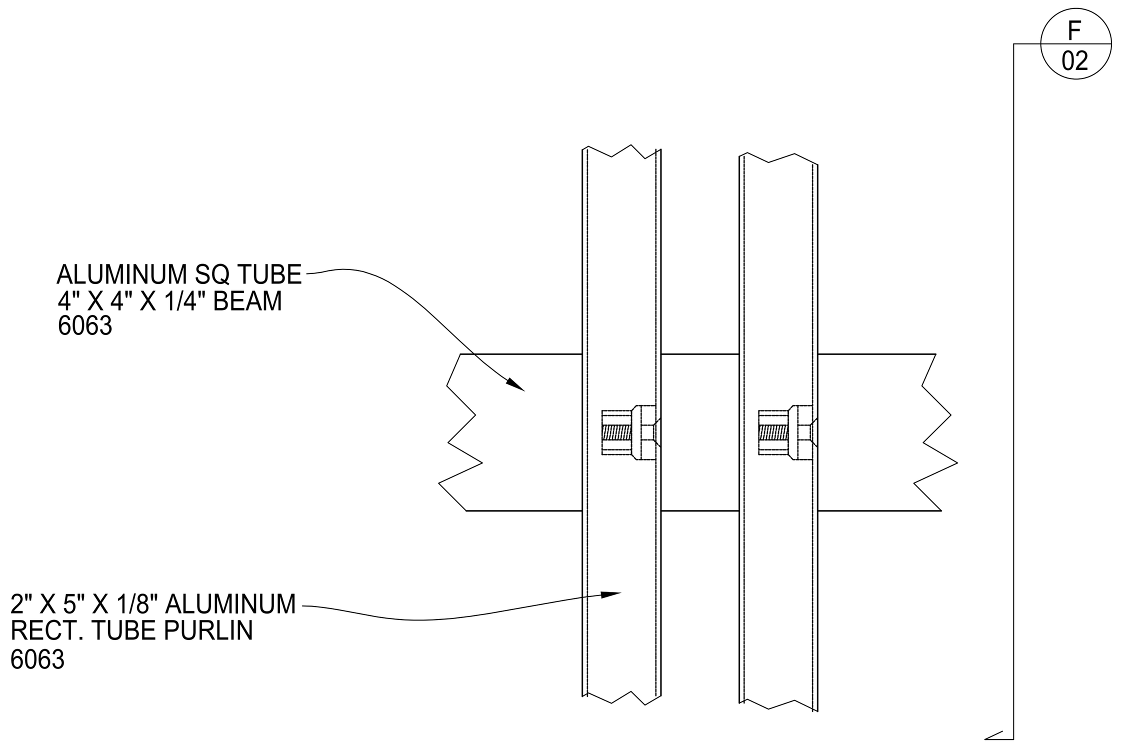

E CONNECTION DETAIL
PLAN VIEW

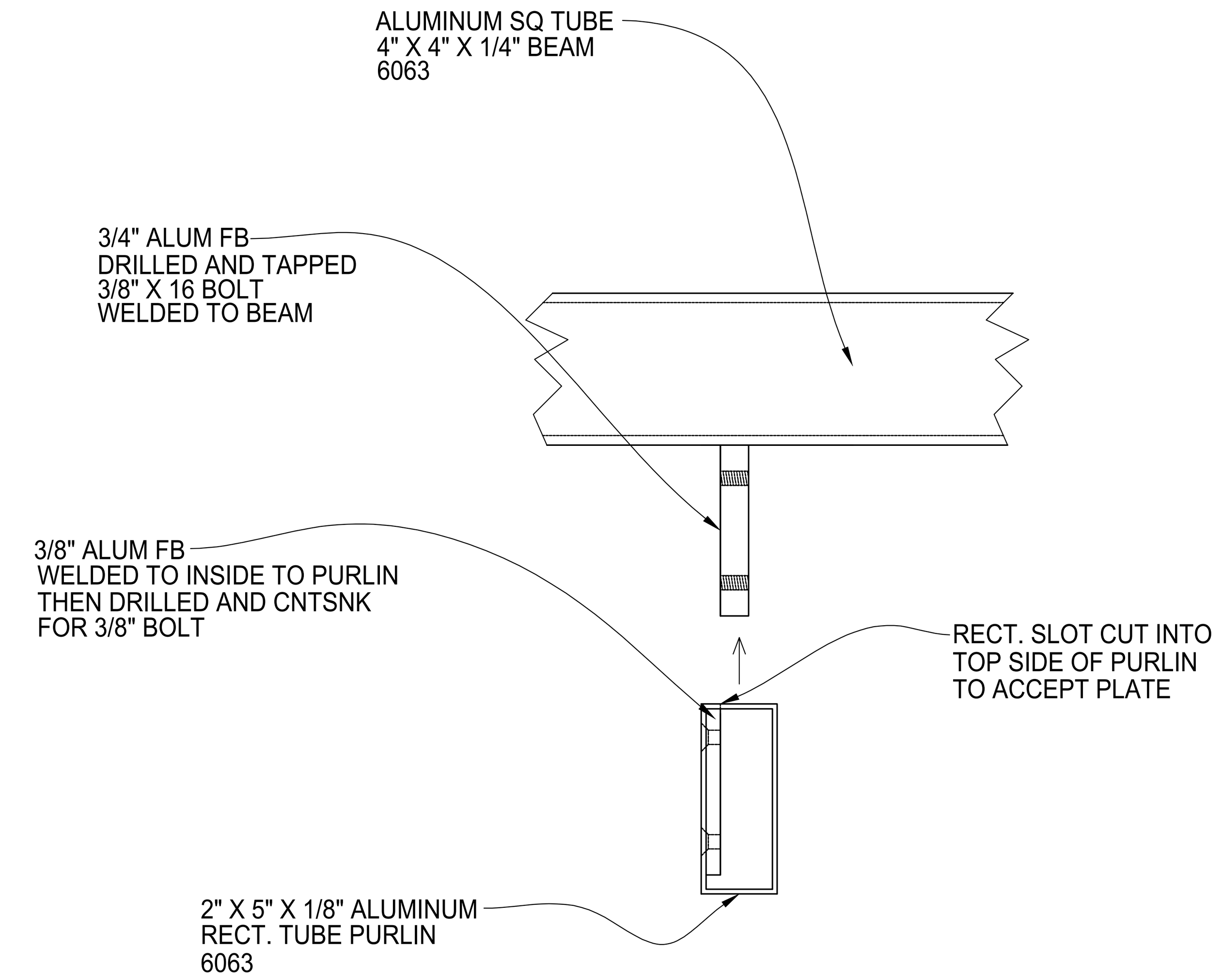

ASSEMBLY DWG

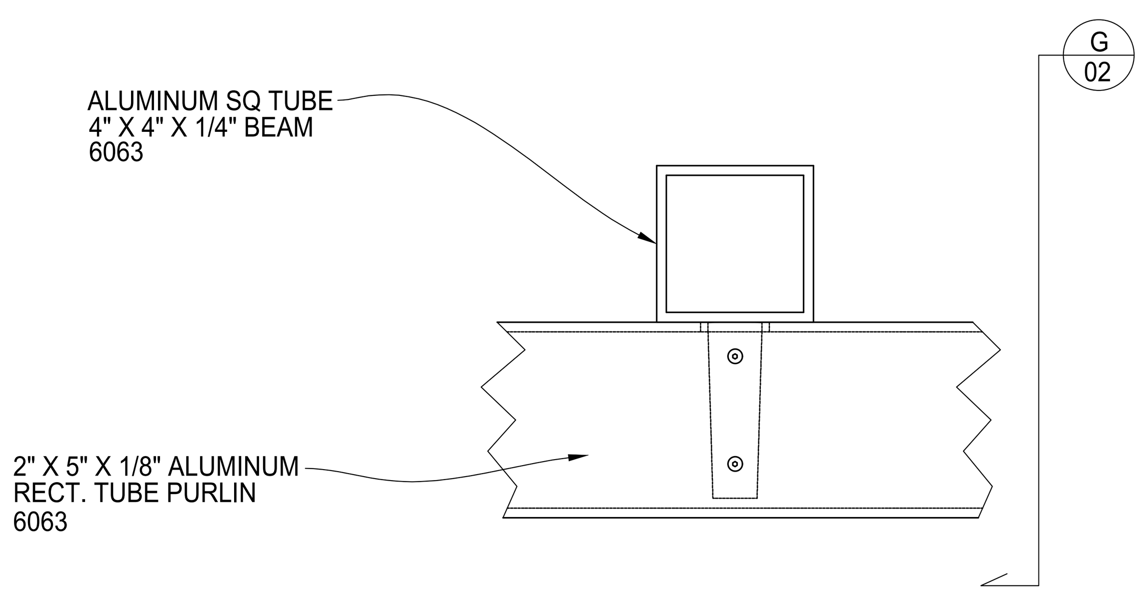

F SECTION DETAIL

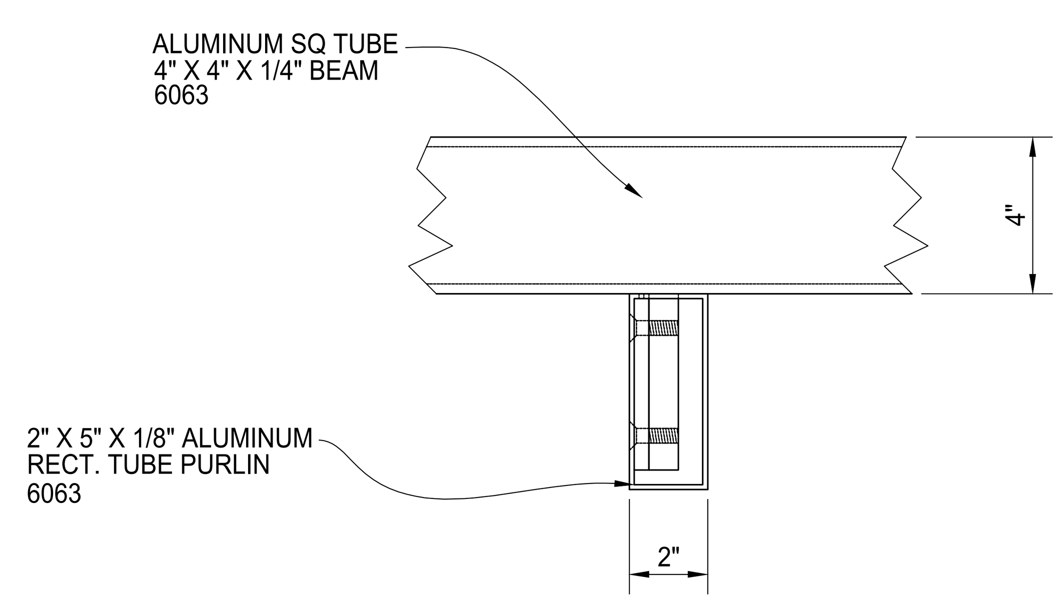

G SECTION DETAIL

BILL OF MATERIALS

QTY	MK	DESCRIPTION	LENGTH	NOTES	FINISH
.	.		.	.	.

	START	STOP	ESTIMATED	ACTUAL	INITIALS
CUT			.		
ROLL			.		
WELD			.		
GRIND			.		
OTHER			.		
OTHER			.		
TOTAL			.		

REV	DESCRIPTION	DATE
A	CONNECTION DETAILS CHANGED. BOLTING INTO THE PURLIN INSTEAD OF THE BEAM.	08/20/2024

SUN SHADE
PURLIN TO BOTTOM OR TOP OF BEAM
CONNECTION DETAILS

PALMSHADE PROJECT #: PBCD24-0001		CLIENT PROJECT #: .	
REFERENCE JOB #: .			
CHKD BY: AF .	SCALE: N.T.S.	DRAWN BY: PB	DATE: 09/04/2024 REV . SHEET # 01