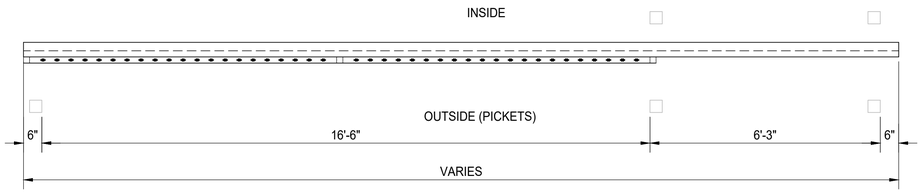

PLAN VIEW

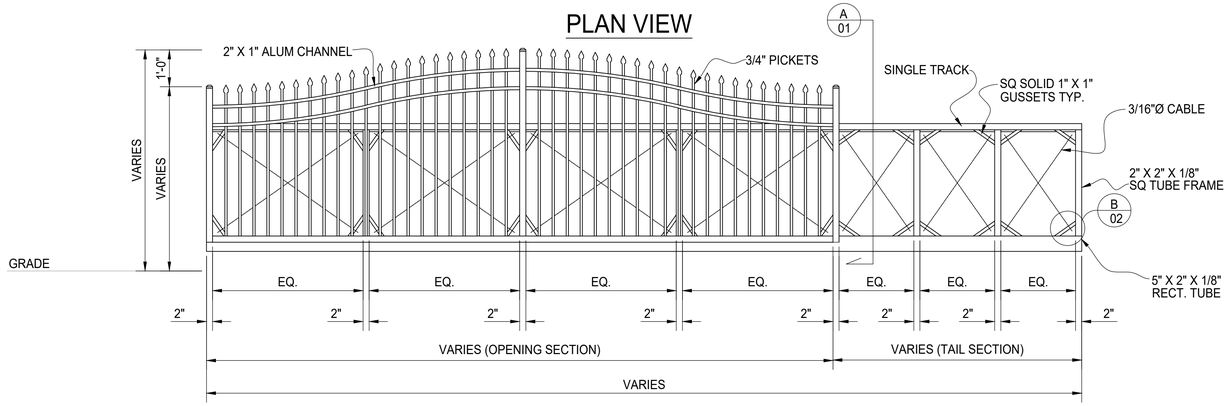

ELEVATION VIEW ALUMINUM CANTILEVER GATE
OUTSIDE LOOKING IN

TRACK FAR SIDE

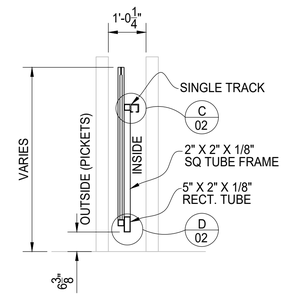

A SECTION
SHOWN AT LOW
END OF SCALLOP

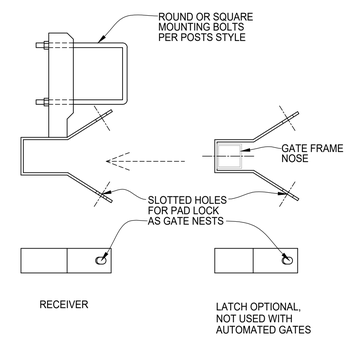

GATE RECEIVER DETAIL

"A" INSIDE TO INSIDE CLEAR OPENING	
"B" LEAF WIDTH	
"C" HINGE GAP	
HINGE STYLE?	
HINGE PROVIDED BY?	
"D" LATCH GAP	
LATCH STYLE?	
LATCH PROVIDED BY?	
"E" POST SIZE	
POST PROVIDED BY?	
PLATED OR EMBEDDED?	
PLATE SIZE / EMBED DEPTH?	
"F" PICKET SIZE	
"G" PICKET INSIDE TO INSIDE SPACING	
"H" GATE LEAF HEIGHT	
"J" CLEARANCE GAP	
"K" GRADE TO TOP HEIGHT	
"L" FRAME TOP MEMBER SIZE	
"M" FRAME LATCH SIDE MEMBER SIZE	
"N" FRAME HINGE SIDE MEMBER SIZE	
"P" FRAME BOTTOM MEMBER SIZE	
"Q" SCALLOP HEIGHT	
"R" FINIAL HEIGHT	
GATE SWINGS OUT AS SHOWN?	
COLOR/FINISH?	
MATERIAL?	
ADDITIONAL INFORMATION:	

SPECIFICATIONS
Aluminum Cantilever Gate
10-25-16 Update

As manufactured by America's Fence Store, Incorporated, we certify that the aluminum cantilever gate shall conform to the following specifications: FS RR-191/2D Type III & IV, ASTM F 1184-88 and ASTM F 2200 as it relates specifically to the gate construction.

Fully Fabricated Gate: The gate shall be fully shop fabricated in its largest possible sections. All gate frames, supports and tracks are to be joined by welded connections.

Materials: The frame(s) and track(s) are to be fabricated from aluminum extrusions (6063-T6). Single track applications provide an upper track that weighs 5.15# / foot. Double track applications provide an upper track that weighs 11.916# / ft. The vertical and bottom track shall be a minimum of 2" x 2" x 1.12#/ foot (6063-T6) aluminum extrusions. The diagonal bracing shall be a minimum of 1" x 2" x .808# / foot (6063-T6) aluminum extrusions. For openings greater than 20', the bottom track shall be a minimum of 2" x 5" x 3.12# / foot.

Fabric: The chain link fabric shall be identical in gauge, mesh, coating and salvage as that used on the balance of the fence project. If the gate stands alone than the fabric shall be specified.

Design: The vertical supports of the gate shall not be spaced greater than six feet on center and will not exceed the height of the gate. The tail section of the gate shall be fully "X" in sections not to exceed six feet on center.

For openings greater than 20' bottom rail shall be 5" x 2" or 4" x 2" in lieu of 2" x 2". The tail section of the gate shall be fully "X" and "+" in sections not to exceed six feet on center. If required, trussing may be established by 3/16" galvanized cable in "X" pattern throughout the opening and tail section of the gate. All cable assemblies will be equipped with field adjustable tension devices.

If required, barbwire arms will be welded or bolted on top of the gate track not to exceed ten feet on center. The fabric shall be held in place by tension bars, tension bands and bolts. Barbwire shall be held in place by end bands and bolts.

The gate shall traverse by means of 2 heavy duty aluminum, internal type upper tracks. Each track shall be welded to the gate frame. Slide gate trucks/trolleys are to be bolted to truck hanger brackets located at each of the gate mounting posts.

Lower guide roller assemblies with protective pinch point covers are to be mounted near the bottom of the gate mounting posts to keep the bottom of the gate in place. Lower guide rollers shall be of nylon construction.

Truck/Trolley assemblies and hanger brackets shall be stainless steel. Each trolley shall be a 6 wheel unit (4 vertical wheels and 2 horizontal guide wheels), constructed of a 1 piece machined steel body, factory lubricated, with sealed bearings and a 5/8" diameter heat treated mounting bolt with an aircraft lock nut and an adjustable 4-way mount. The track shall be fitted with physical stops.

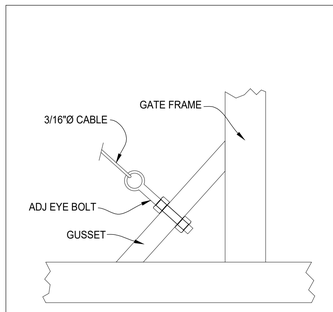

B DETAIL

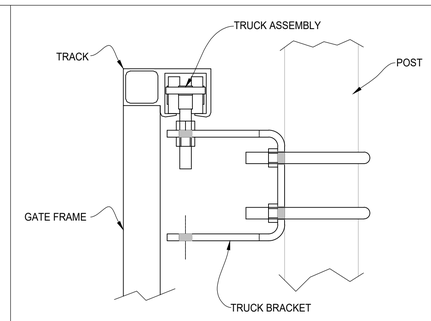

C DETAIL

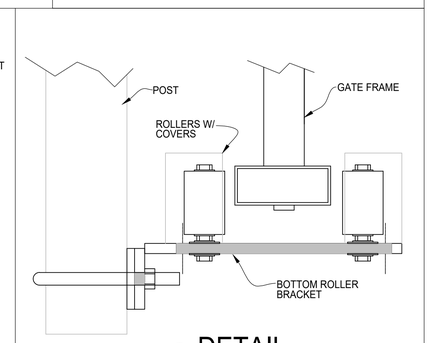

D DETAIL

REV	DESCRIPTION	DATE
.	.	.
.	.	.

PalmSHIELD

OVER ARCH SPEAR TOP SINGLE TRACK
/
/
FINISH TO BE DETERMINED

PALMSHIELD PROJECT #: .		CLIENT PROJECT #: .			
REFERENCE JOB #: .		RETURN BY DATE: .			
CHKD BY: .	SCALE: N.T.S.	DRAWN BY: .	DATE: .	REV .	SHEET # 01