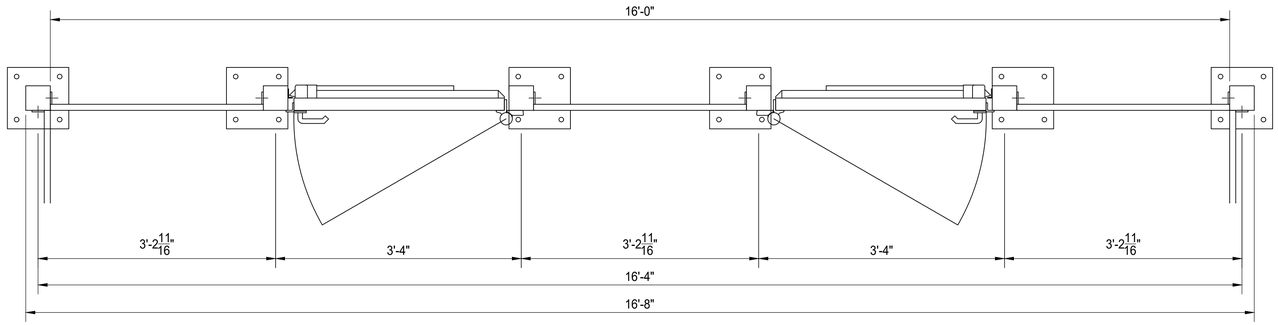

PLAN VIEW

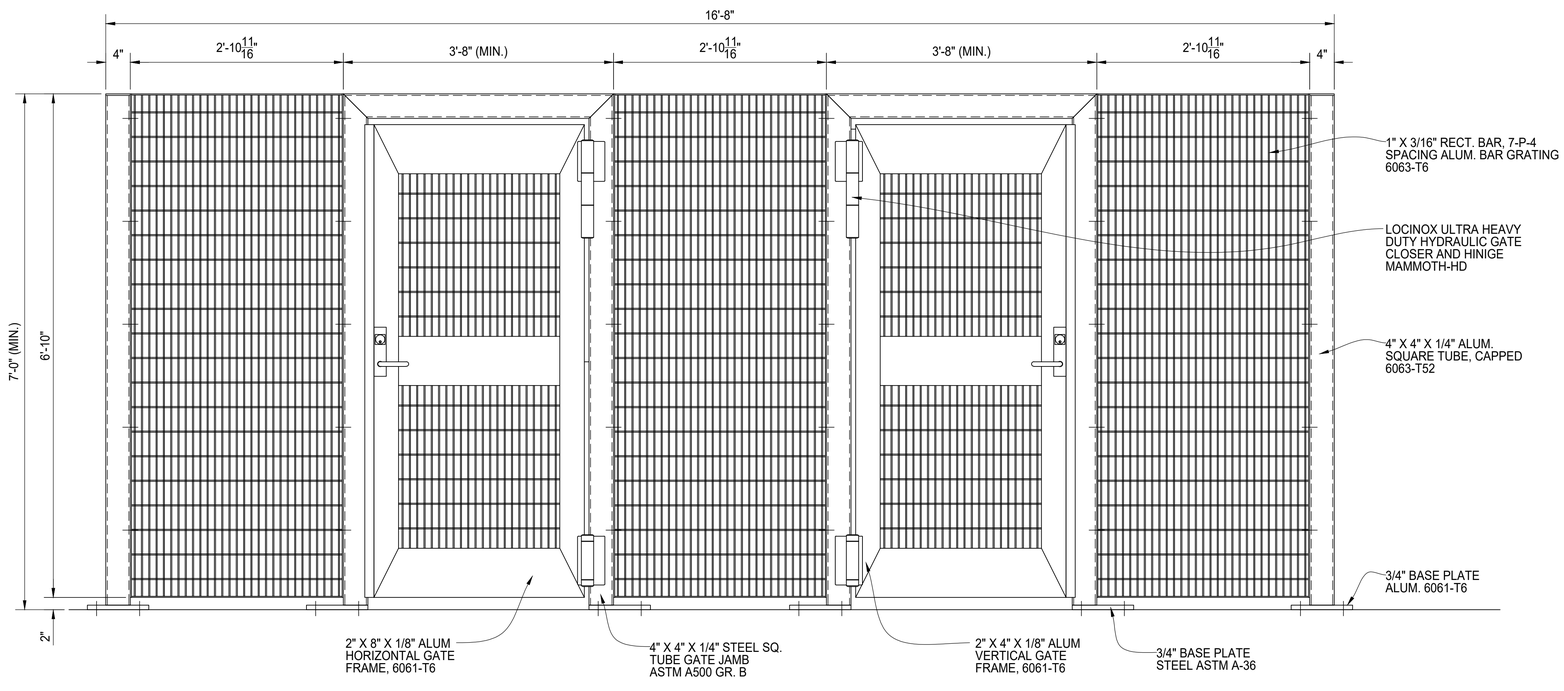

PEDESTRIAN GATE ENTRY - FRONT OF GATE ELEVATION VIEW

SEE SHEET 06 FOR GATE HARDWARE DETAILS.
LATCH HANDLE TO BE 42" ABOVE GRADE.

BILL OF MATERIALS

QTY	MK	DESCRIPTION	LENGTH	NOTES	FINISH
.	.		.	.	.

	START	STOP	ESTIMATED	ACTUAL	INITIALS
CUT			.		
ROLL			.		
WELD			.		
GRIND			.		
OTHER			.		
OTHER			.		
TOTAL			.		

REV	DESCRIPTION	DATE
.	.	.
.	.	.

PALMSHIELD

PEDESTRIAN GATE ENTRY
BAR GRADING INFILL
ELEVATION VIEW
FINISH TO BE DETERMINED

AMERICAN FENCE PROJECT #: .		CLIENT PROJECT #: .	
REFERENCE JOB #: .			
CHKD BY: . .	SCALE: 1 1/2" = 1'-0"	DRAWN BY: PB	DATE: 07/25/2023
REV .	SHEET # 02		