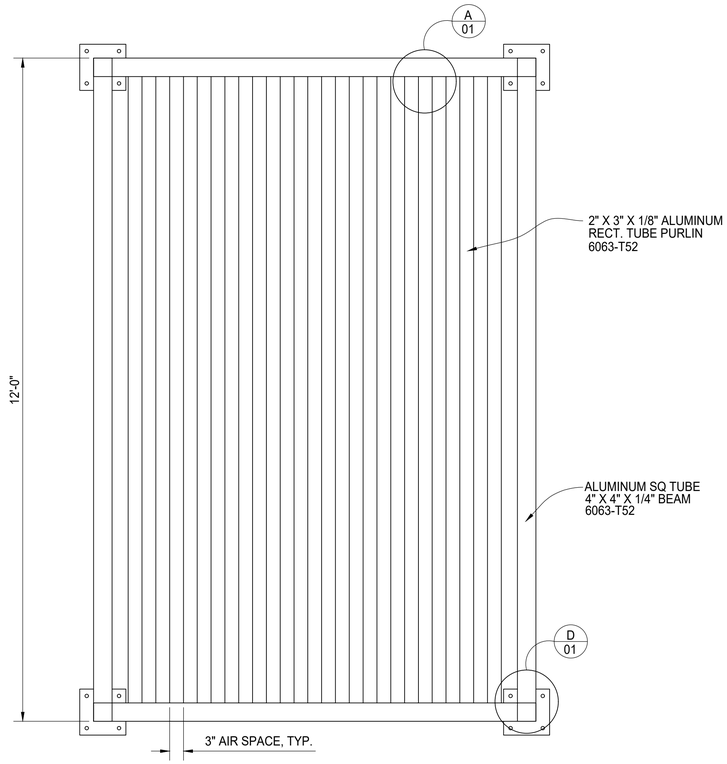

INTI SUN SHADE PLAN VIEW

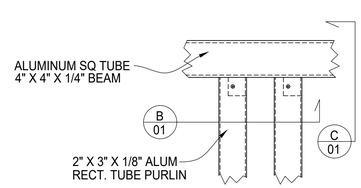

A CONNECTION DETAIL
PLAN VIEW

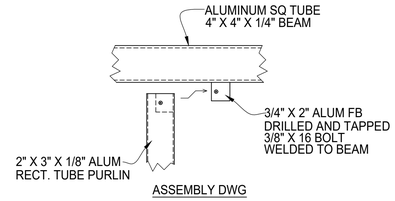

ASSEMBLY DWG

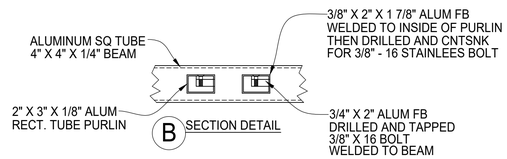

B SECTION DETAIL

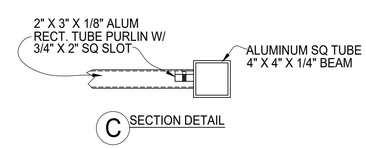

C SECTION DETAIL

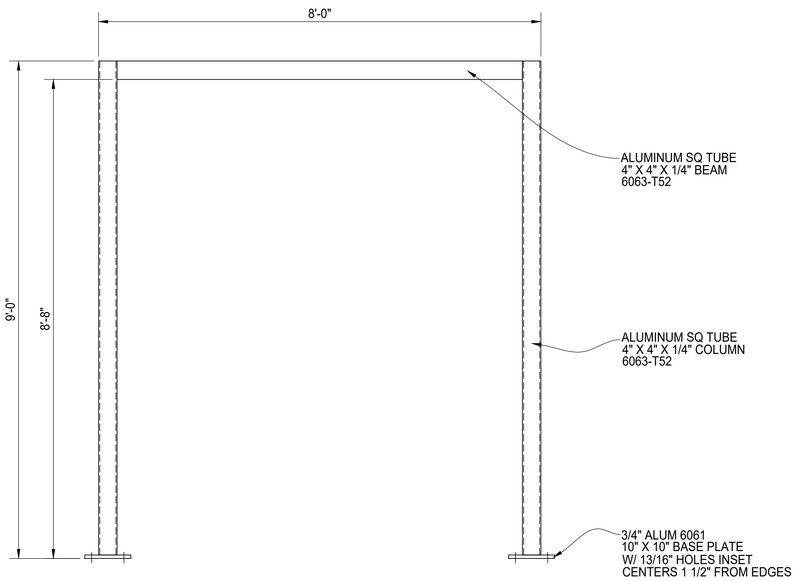

INTI SUN SHADE ELEVATION VIEW

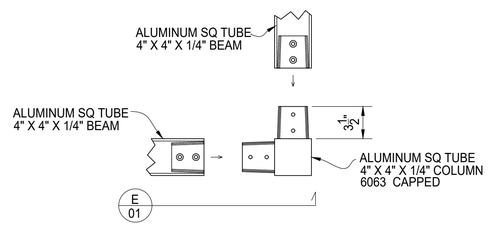

D CONNECTION DETAIL
PLAN VIEW

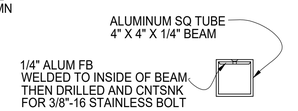

F SECTION DETAIL

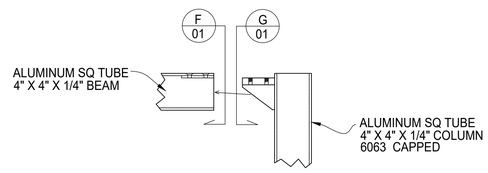

E SECTION DETAIL

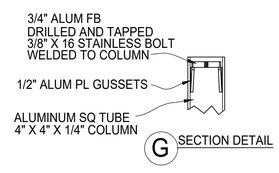

G SECTION DETAIL

BILL OF MATERIALS

QTY	MK	DESCRIPTION	LENGTH	NOTES	FINISH
.	.		.	.	.

	START	STOP	ESTIMATED	ACTUAL	INITIALS
CUT			.		
ROLL			.		
WELD			.		
GRIND			.		
OTHER			.		
OTHER			.		
TOTAL			.		

REV	DESCRIPTION	DATE
A	ADD ALUM GRADE AND INCREASE THICKNESS OF THREADED PLATES	09/18/2024 (AF)

PATRIOT CUSTOM METALS

INTI SUN SHADE

AMERICAN FENCE PROJECT #: .
CLIENT PROJECT #: .
REFERENCE JOB #: .
CHKD BY: AF . | SCALE: N.T.S. | DRAWN BY: AF | DATE: 3/5/24 | REV A | SHEET # 01