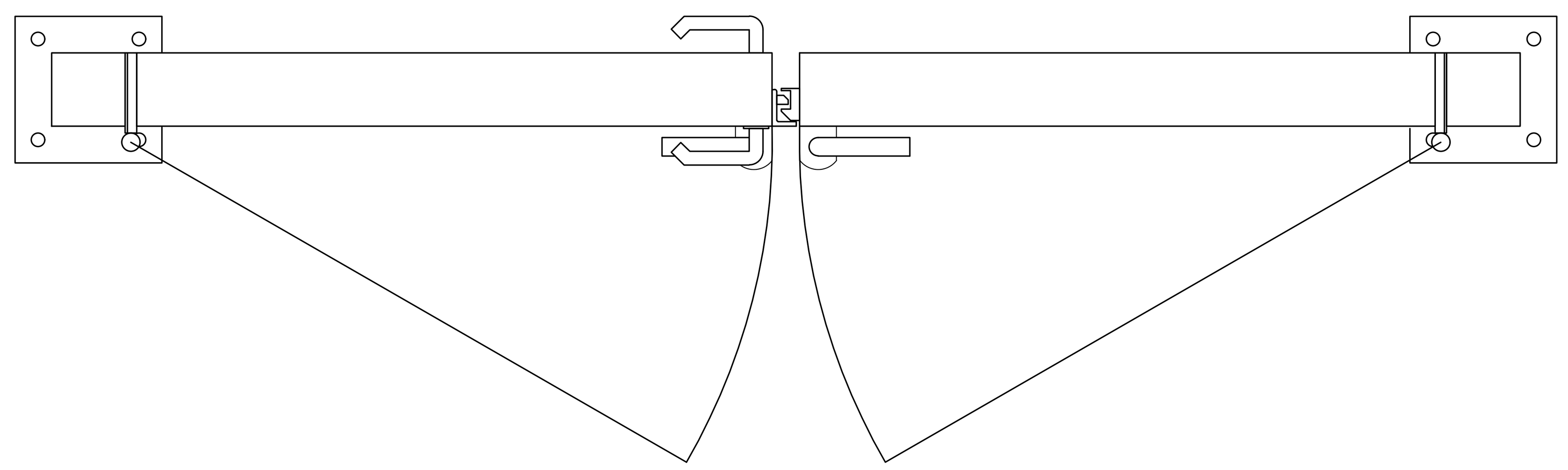

PLAN VIEW

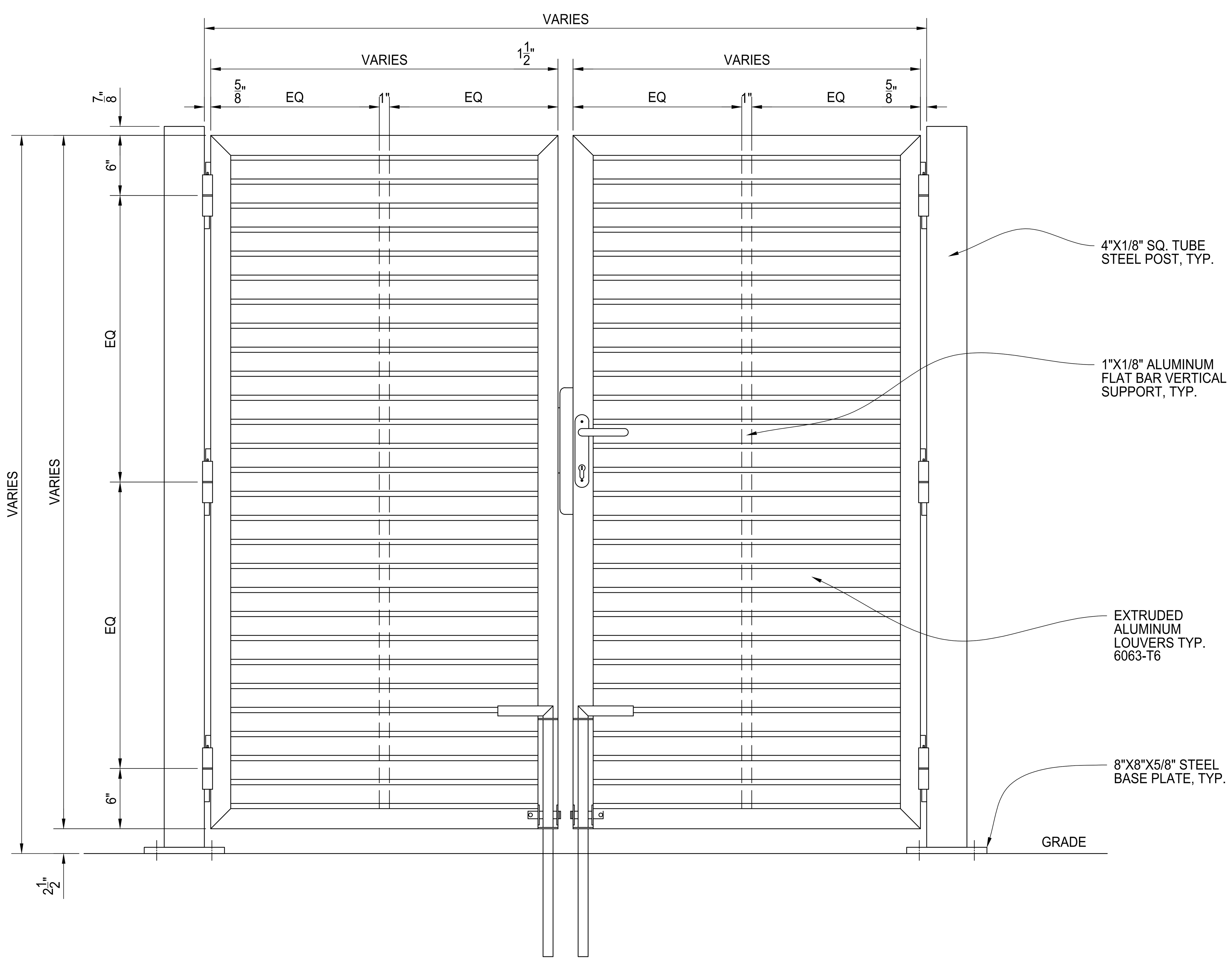

DOUBLE DRIVE GATE ASSEMBLY

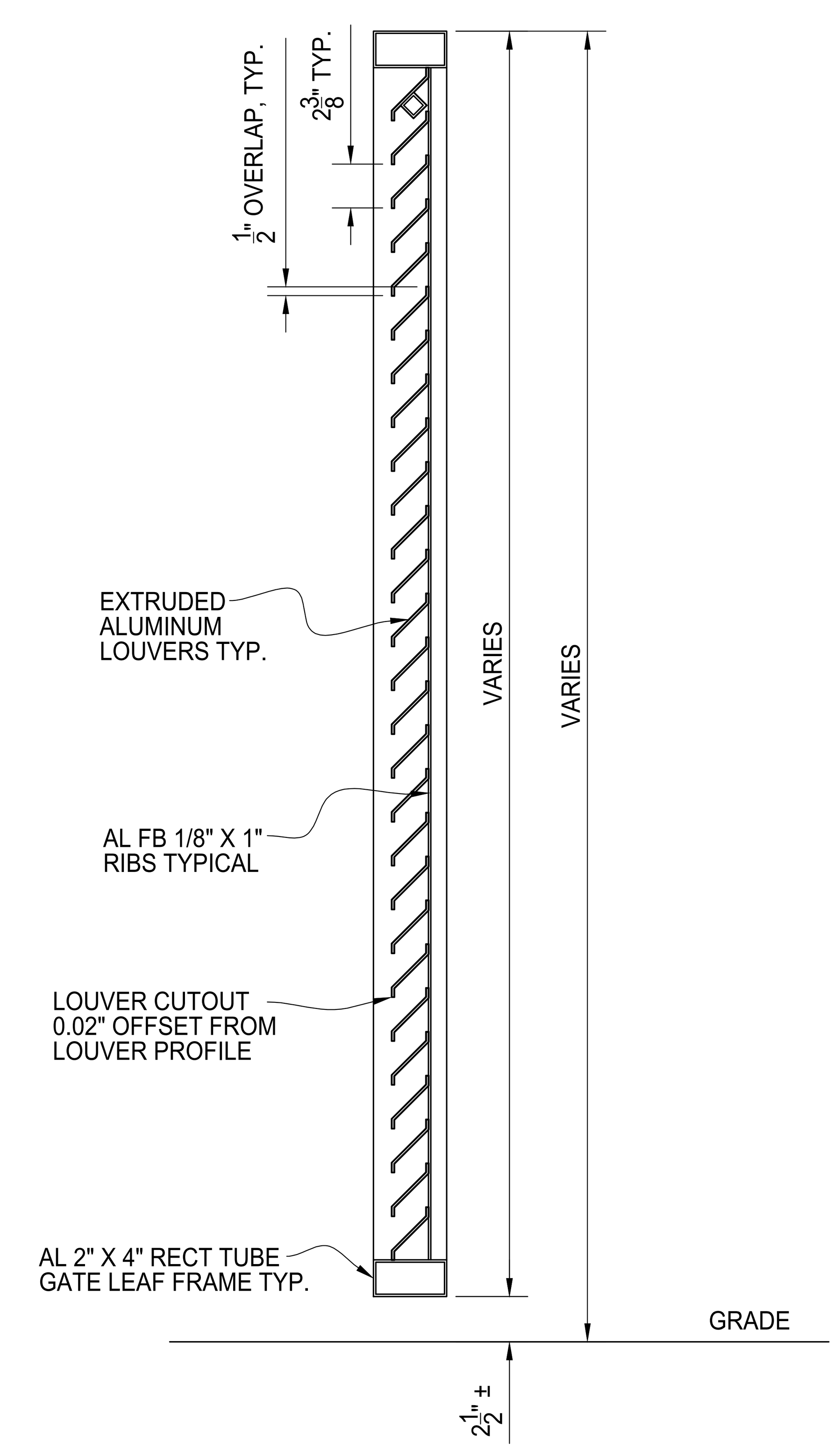

TYPICAL GATE SECTION

BILL OF MATERIALS

QTY	MK	DESCRIPTION	LENGTH	NOTES	FINISH
.		.	.	.	.

	START	STOP	ESTIMATED	ACTUAL	INITIALS
CUT			.		
ROLL			.		
WELD			.		
GRIND			.		
OTHER			.		
OTHER			.		
TOTAL			.		

REV	DESCRIPTION	DATE
B	.	03/30/2021

PalmSHIELD

ARIA LOUVERS
ALUM. LOUVERED POST CUTOUT PANEL
DOUBLE DRIVE GATE ASSEMBLY
FINISH TO BE DETERMINED

AMERICAN FENCE PROJECT #: ARIA21-D.D. GATE		CLIENT PROJECT #: .	
REFERENCE JOB #: .			
CHKD BY: AF	TL	SCALE: N.T.S.	DRAWN BY: PB · DATE: 12/21/2021 · REV . · SHEET # 01