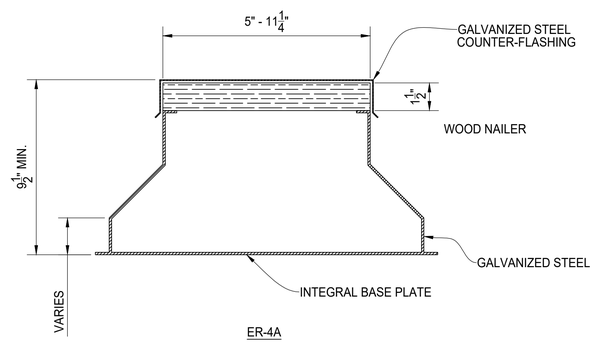

ER-4A

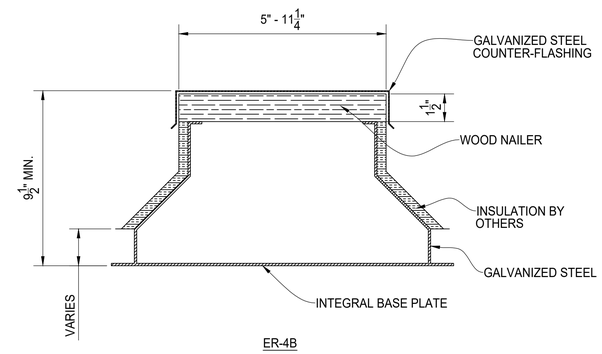

ER-4B

ER-4A/ER-4B - EQUIPMENT RAILS FOR INSULATED DECKS

BILL OF MATERIALS

QTY	MK	DESCRIPTION	LENGTH	NOTES	FINISH
.	.		.	.	.

	START	STOP	ESTIMATED	ACTUAL	INITIALS
CUT			.		
ROLL			.		
WELD			.		
GRIND			.		
OTHER			.		
OTHER			.		
TOTAL			.		

REV	DESCRIPTION	DATE
.	.	.
.	.	.

PalmSHIELD

ROOFTOP EQUIPMENT RAILS
ER-4A, ER-4B EQUIPMENT RAILS
SECTION VIEWS

AMERICAN FENCE PROJECT #: PS21-ER4-A/ER-4B
CLIENT PROJECT #: .
REFERENCE JOB #: .
CHKD BY: . .
SCALE: N.T.S.
DRAWN BY: PB
DATE: 08/24/2021
REV .
SHEET # 01