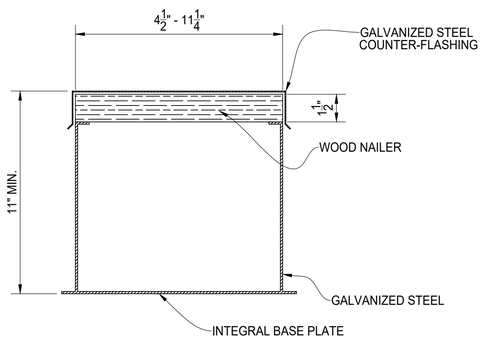

ER-2A

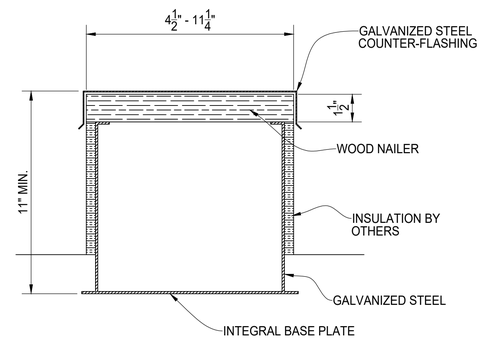

ER-2B

ER-2A/ER-2B - EQUIPMENT RAILS FOR LIGHTWEIGHT FILL, TAPERED INSULATION OR SINGLE PLY ROOFING

BILL OF MATERIALS

QTY	MK	DESCRIPTION	LENGTH	NOTES	FINISH
.	.		.	.	.

	START	STOP	ESTIMATED	ACTUAL	INITIALS
CUT			.		
ROLL			.		
WELD			.		
GRIND			.		
OTHER			.		
OTHER			.		
TOTAL			.		

REV	DESCRIPTION	DATE
.	.	.

PalmSHIELD

ROOFTOP EQUIPMENT RAILS
ER-2A, ER-2B EQUIPMENT RAILS
SECTION VIEWS

AMERICAN FENCE PROJECT #: PS21-ER4-A/ER-4B		CLIENT PROJECT #: .	
REFERENCE JOB #: .			
CHKD BY: . .	SCALE: N.T.S.	DRAWN BY: PB	DATE: 08/24/2021
REV .	SHEET # 01		