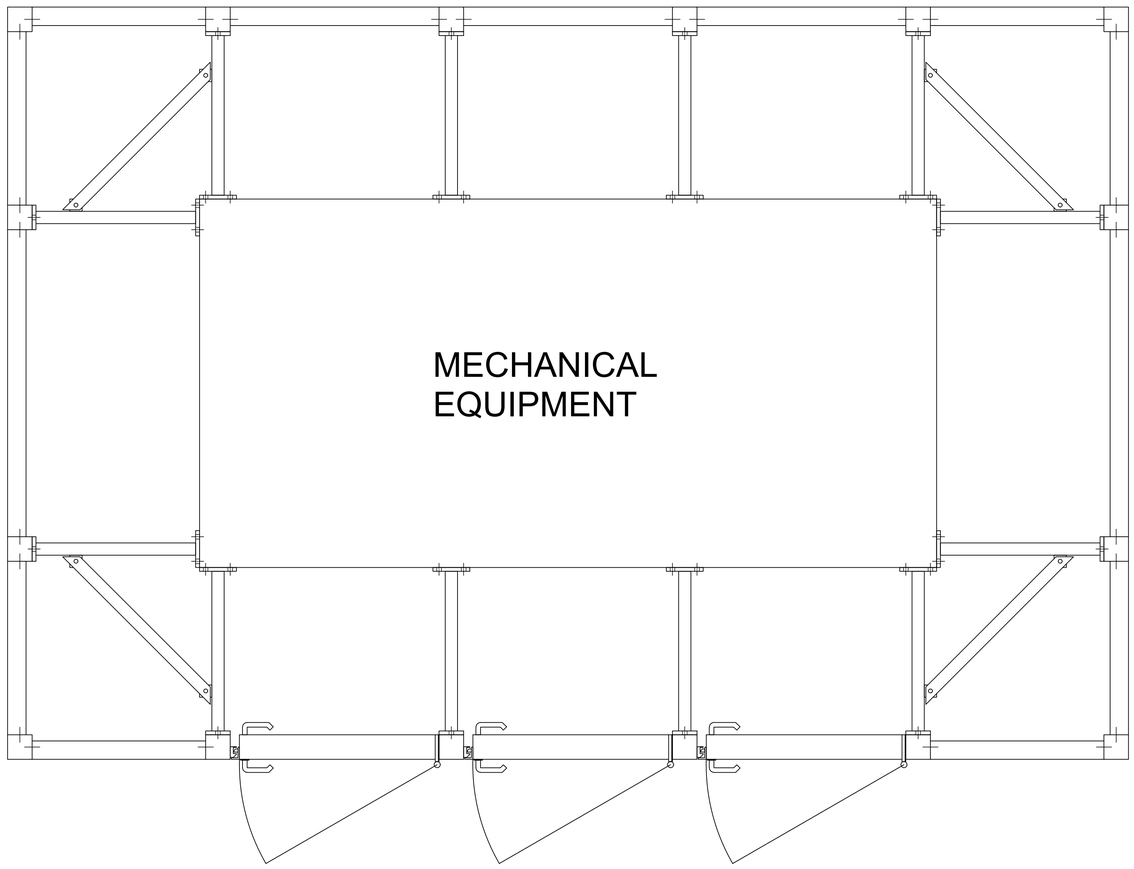

CANTILEVER TRUSS ENCLOSURE - PLAN VIEW

BILL OF MATERIALS

QTY	MK	DESCRIPTION	LENGTH	NOTES	FINISH
.	.		.	.	.

	START	STOP	ESTIMATED	ACTUAL	INITIALS
CUT			.		
ROLL			.		
WELD			.		
GRIND			.		
OTHER			.		
OTHER			.		
TOTAL			.		

REV	DESCRIPTION	DATE
.	.	.
.	.	.

PalmSHIELD

ROOFTOP MAECHANICAL EQUIPMENT
CANTILEVER TRUSS ENCLOSURE
PLAN VIEW

.

AMERICAN FENCE PROJECT #: PS21-TRUSS		CLIENT PROJECT #: .	
REFERENCE JOB #: .			
CHKD BY: . .	SCALE: N.T.S.	DRAWN BY: PB	DATE: 09/14/2021
REV .	SHEET # 02		