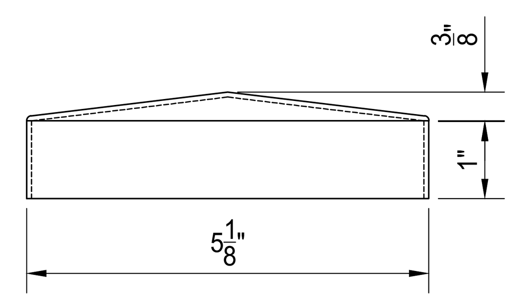

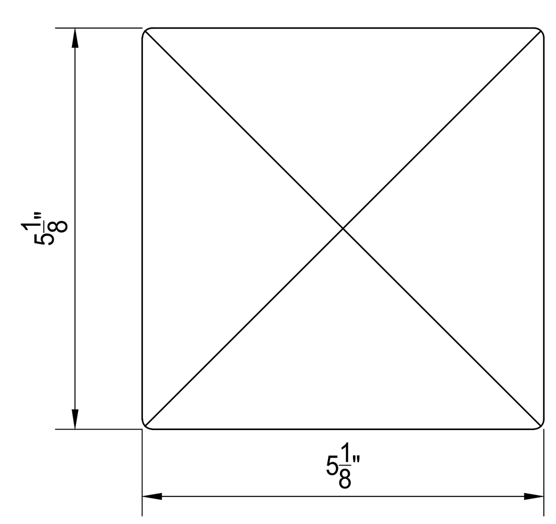

BILL OF MATERIALS

QTY	MK	DESCRIPTION	LENGTH	NOTES	FINISH
.	.		.	.	.

	START	STOP	ESTIMATED	ACTUAL	INITIALS
CUT			.		
ROLL			.		
WELD			.		
GRIND			.		
OTHER			.		
OTHER			.		
TOTAL			.		

REV	DESCRIPTION	DATE
.	.	.

PalmSHIELD

MERCURY SEMI-PRIVATE
VINYL INFILL - VINYL POST
POST CAP DETAIL
COLOR TO BE DETERMINED

AMERICAN FENCE PROJECT #: .		CLIENT PROJECT #: .			
REFERENCE JOB #: .					
CHKD BY: TL .	SCALE: N.T.S.	DRAWN BY: PB	DATE: 03/22/2021	REV .	SHEET # 01