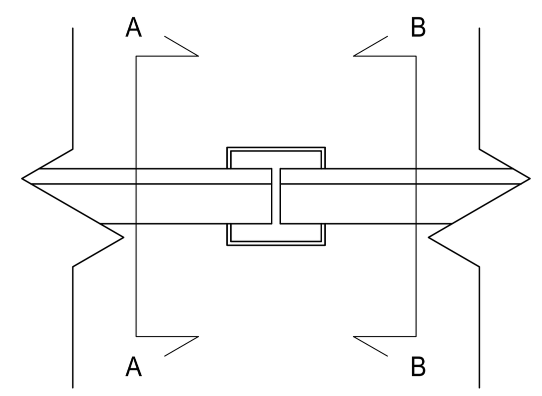

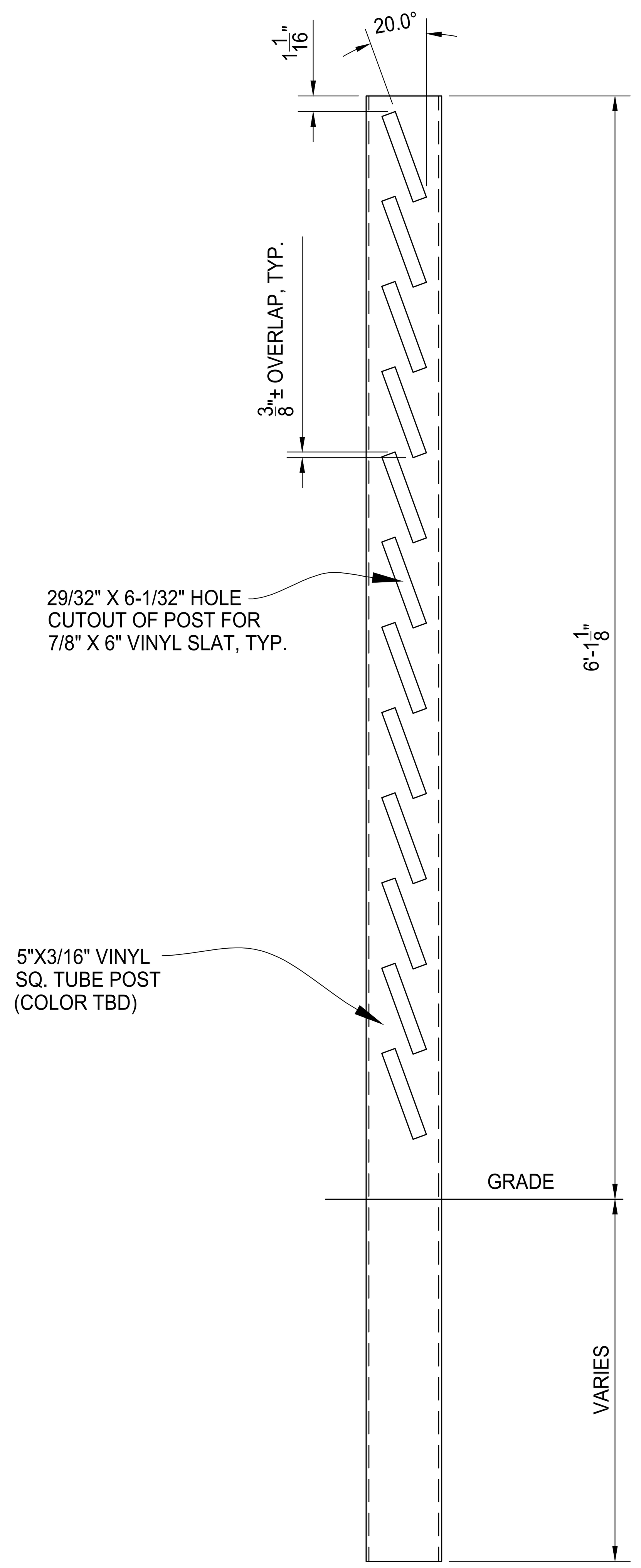

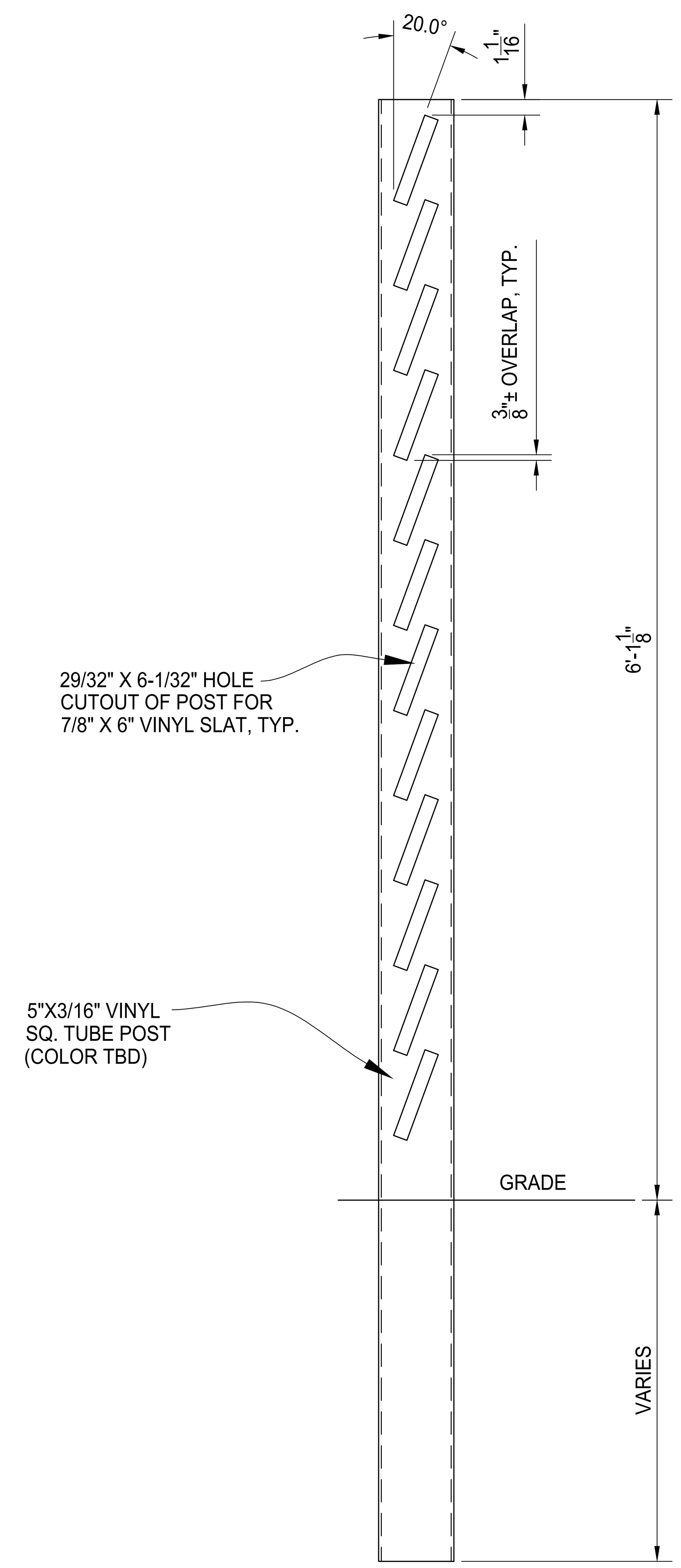

TYPICAL POST ELEVATION ~ A-A

BILL OF MATERIALS

QTY	MK	DESCRIPTION	LENGTH	NOTES	FINISH
.	.		.	.	.

	START	STOP	ESTIMATED	ACTUAL	INITIALS
CUT			.		
ROLL			.		
WELD			.		
GRIND			.		
OTHER			.		
OTHER			.		
TOTAL			.		

REV	DESCRIPTION	DATE
.	.	.

PalmSHIELD

MERCURY LOUVERED
VINYL INFILL - VINYL POST
TYPICAL POST DETAILS
COLOR TO BE DETERMINED

AMERICAN FENCE PROJECT #: .	CLIENT PROJECT #: .
REFERENCE JOB #: .	

CHKD BY: . .	SCALE: N.T.S.	DRAWN BY: PB	DATE: 03/30/2021	REV .	SHEET # 01