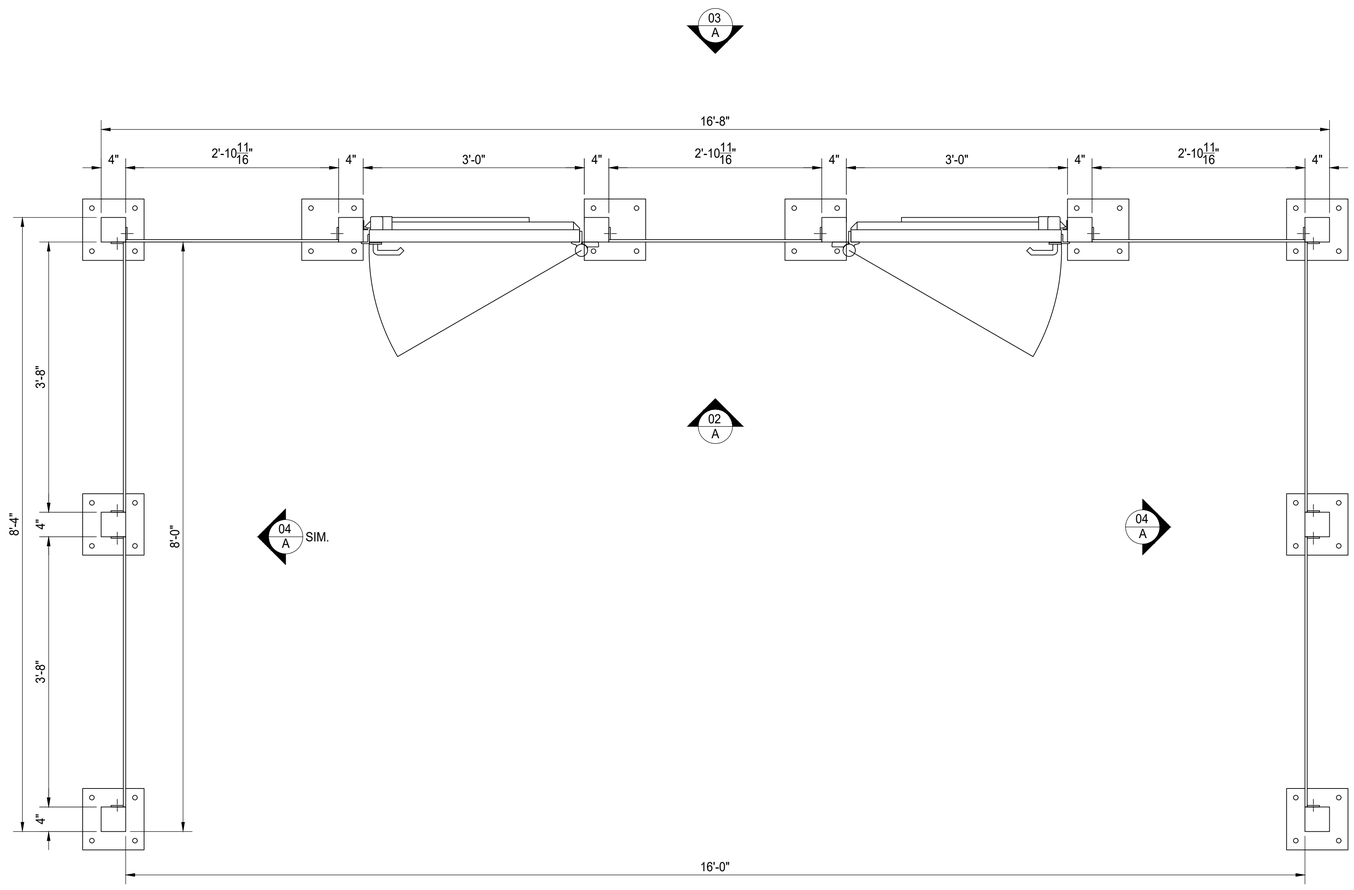

PEDESTRIAN GATE ENTRY - PLAN VIEW

BILL OF MATERIALS

QTY	MK	DESCRIPTION	LENGTH	NOTES	FINISH
.	.		.	.	.

	START	STOP	ESTIMATED	ACTUAL	INITIALS
CUT			.		
ROLL			.		
WELD			.		
GRIND			.		
OTHER			.		
OTHER			.		
TOTAL			.		

REV	DESCRIPTION	DATE
.	.	.
.	.	.

PEDESTRIAN GATE ENTRY
WIRE MESH INFILL
PLAN VIEW
FINISH TO BE DETERMINED

AMERICAN FENCE PROJECT #: .
REFERENCE JOB #: .
CHKD BY: . .
CLIENT PROJECT #: .
SCALE: 1 1/2" = 1'-0"
DRAWN BY: PB
DATE: 07/25/2023
REV .
SHEET # 01

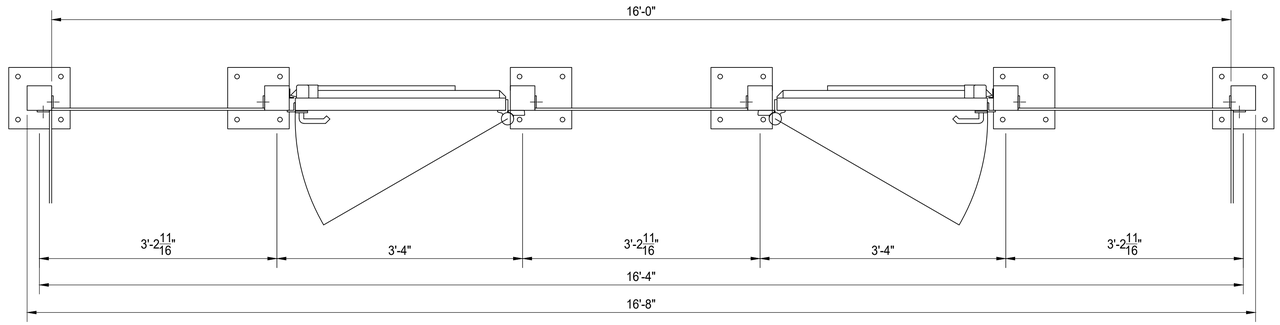

PLAN VIEW

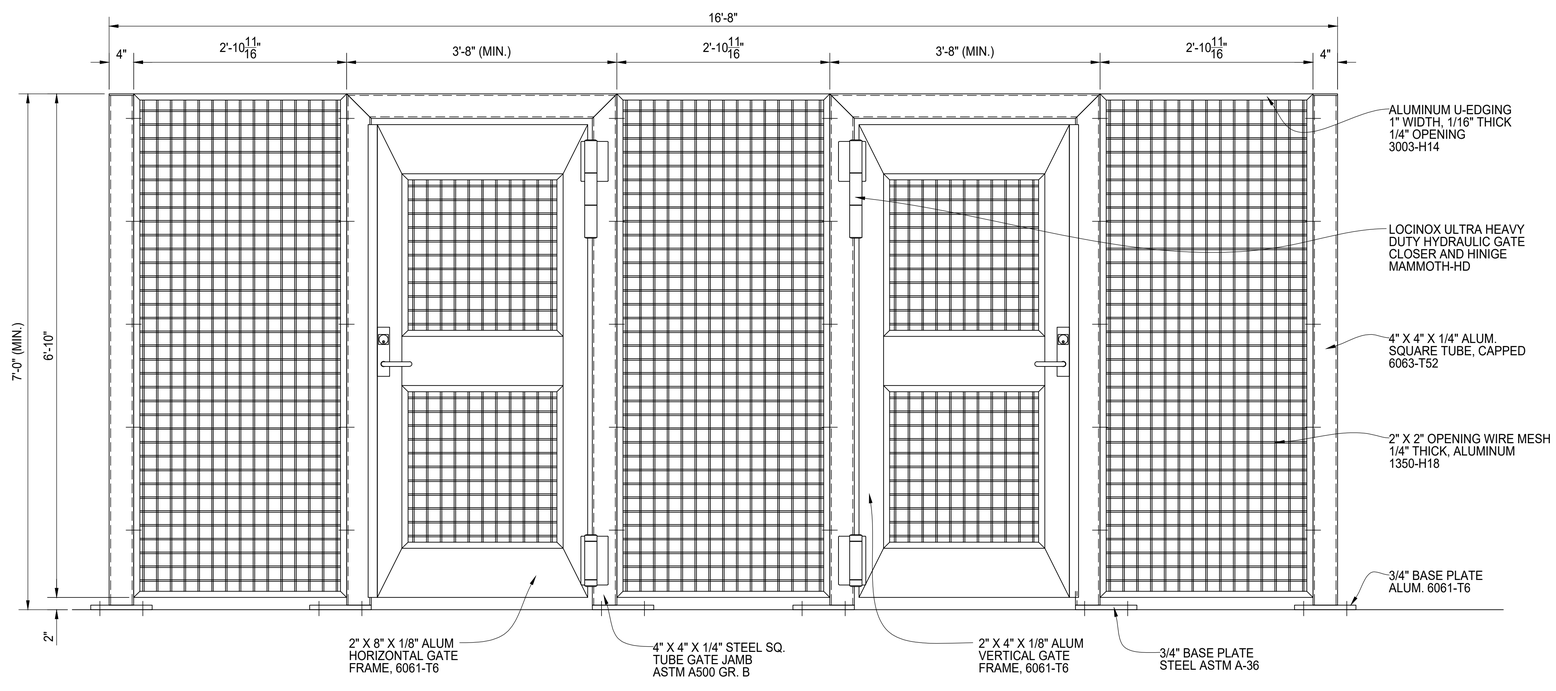

PEDESTRIAN GATE ENTRY - FRONT OF GATE ELEVATION VIEW

SEE SHEET 06 FOR GATE HARDWARE DETAILS.
LATCH HANDLE TO BE 42" ABOVE GRADE.

BILL OF MATERIALS

QTY	MK	DESCRIPTION	LENGTH	NOTES	FINISH
.	.		.	.	.

	START	STOP	ESTIMATED	ACTUAL	INITIALS
CUT			.		
ROLL			.		
WELD			.		
GRIND			.		
OTHER			.		
OTHER			.		
TOTAL			.		

REV	DESCRIPTION	DATE
.	.	.
.	.	.

PALMSHIELD

PEDESTRIAN GATE ENTRY
WIRE MESH INFILL
ELEVATION VIEW
FINISH TO BE DETERMINED

AMERICAN FENCE PROJECT #: .
CLIENT PROJECT #: .
REFERENCE JOB #: .
CHKD BY: . .
SCALE: 1 1/2" = 1'-0"
DRAWN BY: PB
DATE: 07/25/2023
REV .
SHEET # 02

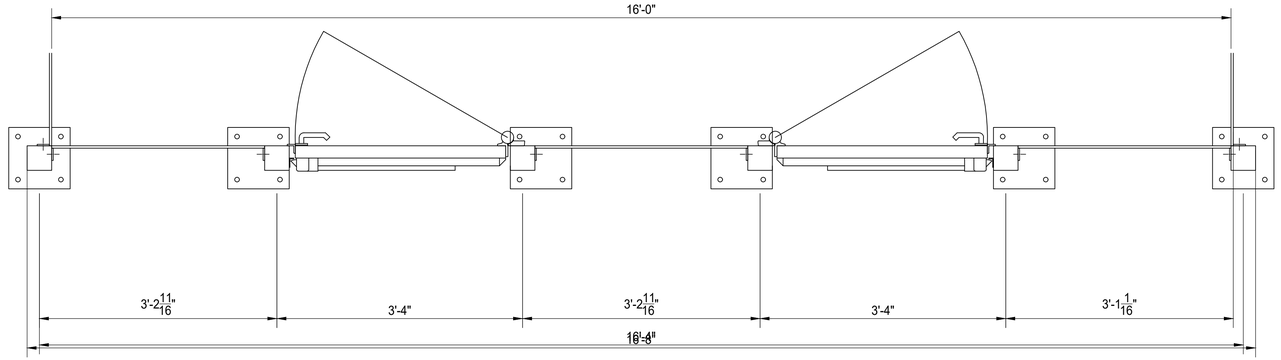

PLAN VIEW

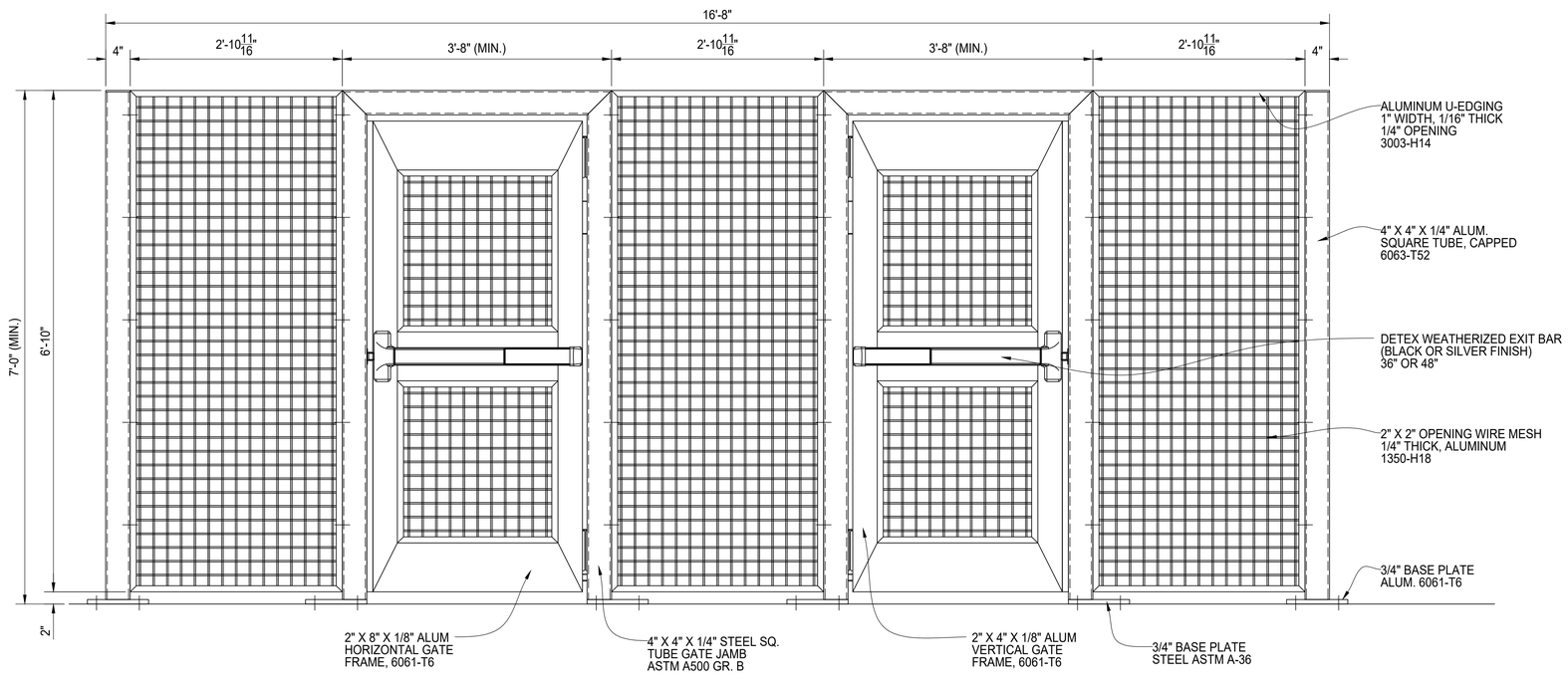

PEDESTRIAN GATE ENTRY - BACK OF GATE ELEVATION VIEW

SEE SHEET 06 FOR GATE HARDWARE DETAILS.
LATCH HANDLE TO BE 42" ABOVE GRADE.

BILL OF MATERIALS

QTY	MK	DESCRIPTION	LENGTH	NOTES	FINISH
.	.		.	.	.

	START	STOP	ESTIMATED	ACTUAL	INITIALS
CUT			.		
ROLL			.		
WELD			.		
GRIND			.		
OTHER			.		
OTHER			.		
TOTAL			.		

REV	DESCRIPTION	DATE
.	.	.
.	.	.

PALMSHIELD

PEDESTRIAN GATE ENTRY
WIRE MESH INFILL
ELEVATION VIEW
FINISH TO BE DETERMINED

AMERICAN FENCE PROJECT #: .
CLIENT PROJECT #: .
REFERENCE JOB #: .
CHKD BY: . .
SCALE: 1 1/2" = 1'-0"
DRAWN BY: PB
DATE: 07/25/2023
REV .
SHEET # 03

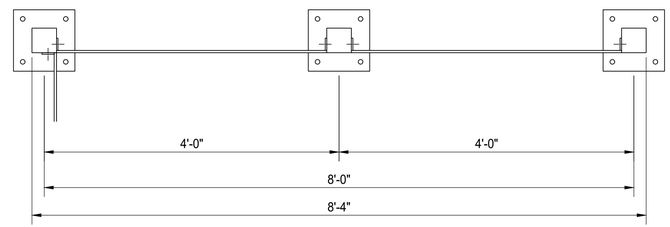

PLAN VIEW

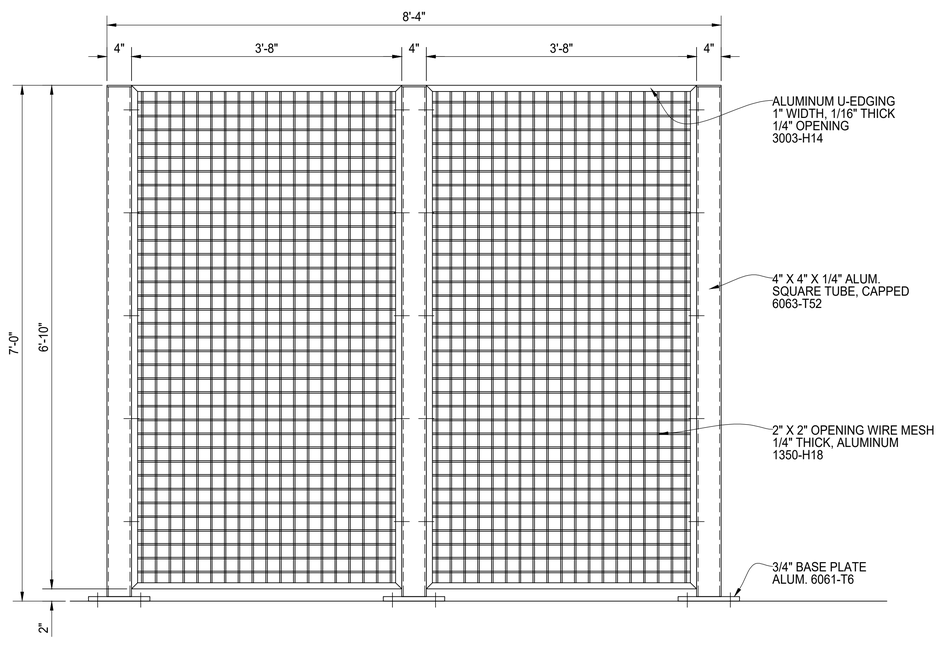

PEDESTRIAN GATE ENTRY - PANEL ELEVATION VIEW

BILL OF MATERIALS

QTY	MK	DESCRIPTION	LENGTH	NOTES	FINISH
.	.		.	.	.

	START	STOP	ESTIMATED	ACTUAL	INITIALS
CUT			.		
ROLL			.		
WELD			.		
GRIND			.		
OTHER			.		
OTHER			.		
TOTAL			.		

REV	DESCRIPTION	DATE
.	.	.

PalmSHIELD

PEDESTRIAN GATE ENTRY
WIRE MESH INFILL
ELEVATION VIEW
FINISH TO BE DETERMINED

AMERICAN FENCE PROJECT #: .		CLIENT PROJECT #: .			
REFERENCE JOB #: .					
CHKD BY: . .	SCALE: 1 1/2" = 1'-0"	DRAWN BY: PB	DATE: 07/25/2023	REV .	SHEET # 04

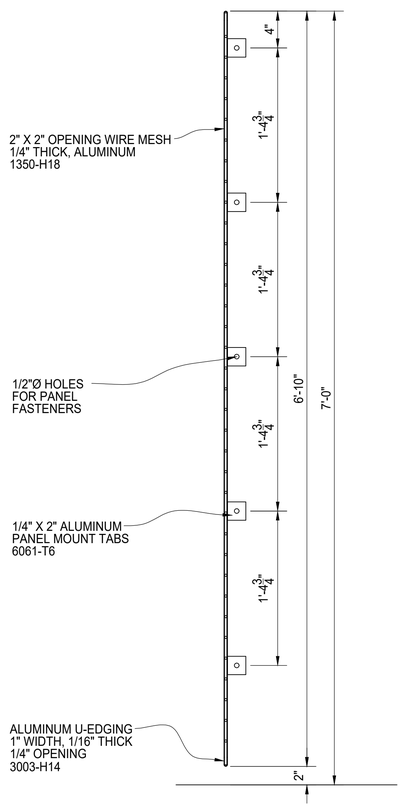

TYPICAL PANEL SECTION

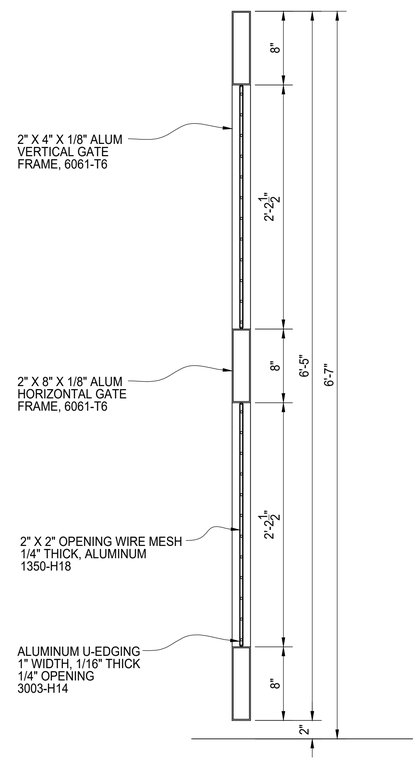

TYPICAL GATE SECTION

BILL OF MATERIALS

QTY	MK	DESCRIPTION	LENGTH	NOTES	FINISH
.	.		.	.	.

	START	STOP	ESTIMATED	ACTUAL	INITIALS
CUT			.		
ROLL			.		
WELD			.		
GRIND			.		
OTHER			.		
OTHER			.		
TOTAL			.		

REV	DESCRIPTION	DATE
.	.	.
.	.	.

PalmSHIELD

PEDESTRIAN GATE ENTRY
WIRE MESH INFILL
PANEL AND GATE SECTIONS
FINISH TO BE DETERMINED

PCM PROJECT #: .		CLIENT PROJECT #: .	
REFERENCE JOB #: .			
CHKD BY: . .	SCALE: N.T.S.	DRAWN BY: PB DATE: 07/25/2023	REV . SHEET # 05

VALUE SERIES®

LEVER TRIM DESIGNS

Assorted outside trims provide security for all types of installations. Built to be as durable as the panic devices, these heavy-duty trims will stand up to heavy use and abuse. The versatile design of the trims, combined with the device mounting plate, makes changing functions as simple as replacing the outside trim. This can easily be done without removing the exit device from the door. These trims can be used on V40 Series Rim and V50 Series Surface Vertical Rods. Detex uses the BHMA functions/descriptions for all trims.

BN and MN Trim

S Lever Standard

BN and MN Trim Available in 689 or 693 finishes

161 Prep Cover Plate Standard

689 693

S Lever

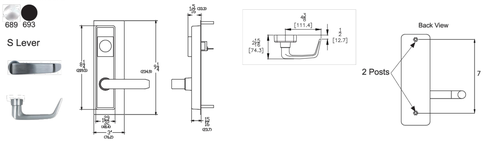

EU2W and D2W Trim

S Lever Standard

EU2W and D2W Trim Available in 626 or 693 finishes

626

693

Mortise cylinder required for EU2W, 08D2W and 09D2W

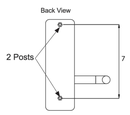

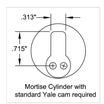

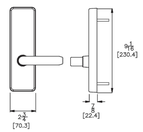

Where Trust is Built™
DETEX®
Life Safety, Security and Security Assurance

BHMA Function/Description

- 02 - Entrance by trim when actuating bar is locked down (dummy trim)
- 08 - Entrance by knob or lever. Key locks or unlocks knob or lever.
- 09 - Entrance by knob or lever only when released by key. Key removable only when locked.
- 14 - Entrance by trim when latch bolt is released by knob or lever. Always active, no cylinder.

Finishes

605 / US3	Polished Brass	629 / US32	Polished Stainless Steel	689 / SP28	Aluminum Painted
606 / US4	Brushed Brass			693 / SPBLK	Black Painted
611 / US9	Polished Bronze	630 / US32D	Brushed Stainless Steel	695 / SP313	Dark Bronze Painted
612 / US10	Brushed Bronze			711 / DC35	Black Anodized
613 / US10B	Oil Rubbed Bronze				

Technical Information

- BN Trims are Zinc Castings
- EU2W and D2W are forged Brass
- When ordered with device, trims will match mounting plate specified
- Value Series trims configured for use with BP2 and BP8 (standard)

Cancer & Reproductive Harm - www.detex.com/prop65

September 11, 2018

Where Trust is Built™
DETEX®
Life Safety, Security and Security Assurance

Detex Corporation
302 Detex Drive
New Braunfels, Texas 78130-3045 USA
PH. (830) 629-2900
(800) 729-3839
FAX (800) 653-3839
http://www.detex.com
USA Sales:
marketing@detex.com
International Sales:
export@detex.com

LOCINOX
Let's make it better together

ULTRA HEAVY DUTY 1 80° HYDRAULIC GATE CLOSER AND HINGE FOR GATES UP TO 440 LBS

I tem No. MAMMOTH-HD-

This heavy-duty gate closer and hinge-in-one is the heaviest gates. The combination of the hydraulically damped Mammoth with the powerful self-closing Raptor hinge is the perfect solution for closing gates weighing up to 440 lbs and 6-1 /2 ft. wide. Both hinges are equipped with double bearings for extremely smooth functioning. The Active Thermal System guarantees a constant closing speed, una
hinge is included.

SPECIFICATIONS

Speci

1 80° self-closing double bearing hinge with adjustable closing speed and
Robust yet stylish design with high quality components
Weatherproof aluminum housing designed for exterior use
Consistent closing speed thanks to patented hydraulic damping
ADA compliant (< 5 lbs; max 32 Nm) from gate widths of 4.4ft. or more
Vandal and tamper proof
For left and right handed gates
Fast and easy installation with Quick-Fix

Available in following RAL-colors

VALUE SERIES®

V40
Rim Exit Device

The V40 Series **rim exit device** is secure and durable **panic and fire exit hardware** at an economical price. It is designed for use on all types of single and double doors with mullions. The patented mounting plate and strike locator system ensures the easiest and most accurate installation of panic hardware available.

V40
(EB Finish)

V40
(711 Finish)

ANSI 156.3 - 2008 Grade 1 Type 1

Standard V40 Rim Device accommodates wide stile doors, 3" or greater stile, and flush doors. For Narrow Stile doors, 2" to 2 1/2" stiles, specify V40 NS model which provides a 2" longer device and a lower profile strike.

Benefits

- Priced to be the best value for durable and attractive loss prevention panic hardware
- Fast and easy installation
- Minimal door prep saves time and money
- Fits almost any door in any décor
- Outside trims are easily changed or rekeyed without removing device from door

Features

- Patented mounting plate and strike locator
- Covers a 161 door prep
- Stainless steel, 3/4" deadlocking Pullman-type latch bolt
- Non-handed
- Field sizeable
- 1/8 turn hex key dogging
- Heavy-duty angled end cap
- For Narrow Stile that fits 2" Narrow stile glass door see V40xNS
- 99 - Surface Strike (Std.)
- Heavy-duty ribbed aluminum rail extrusion
- High impact ABS and anodized surfaces
- Withstands over 1400 pounds of static pull force for greater security
- Modular design accepts a variety of outside trims and functions
- Standard and narrow stile pull trims available

Mechanical Options

- CD - Cylinder Dogging
- HD - Hex Dogging (Std.)
- LD - Less Dogging
- 36 - Fits 36" Door Width (Std.)
- 48 - Fits 48" Door Width
- F - 3-Hour Fire Rated
- H - Hurricane Rated
- 98 - Semi Mortise Strike
- Available with 628 Base Rail Extrusion (Std.)
- Available with 711 Base Rail Extrusion

Electrical Options

- Exit Alarm with 9 volt Battery (EB)
- Weatherized Exit Alarm (EBxW)
- Electric Dogging (ED)
- Delayed Egress (EE)
- Exit Alarm Hardwired 24VDC (EH)
- Hardwired 24VAC/DC Exit Alarm with Remote Signal (EHxR)
- Electric Integration (EI)
- Delayed Egress with Magnetic Lock (EM)
- Electric Latch Retraction (ER)
- Electric Switching (ES)
- Request to Exit (EX)
- Weatherized Request to Exit (EXxW)

Where Trust is Built™
DETEX®
Life Safety, Security and Security Assurance

Accessories

- SN1 - Sex Nut Fasteners
- GB2 - Glass Bead Kit
- NSK- Narrow Kit - for 2" narrow stile glass door applications that must be added in the field
- Outside Trim (see Value Series Trim Options)
- Optional Sex Nuts or Security Torx Screws available

Technical Information

- Door Types - Wood, Hollow Metal, Fiberglass or Aluminum
- Door Thickness - Fits standard 1-3/4" - 2-1/4"
- Door Stile - Fits 2-1/2" stile doors with 99 surface strike (Std.)
- Door Stile - Fits 2" narrow stile doors - specify NS
- Machine and Self-Drilling Screws (Std.)

Dimensions

Device

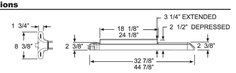

18 1/8" & 32 7/8" device dimensions for 36" door
24 1/8" & 44 7/8" device dimensions for 48" door
Add 2" for NS

Single Door with 99 strike (V40)

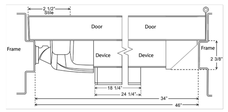

Single Narrow Stile Door with 98 strike (Specify V40xNS)

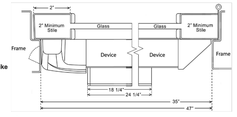

Double Doors

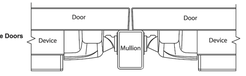

Listings and Approvals

- UL Listed Panic Hardware
- UL Listed Fire Exit Hardware for 3 hours, maximum 4'x10' single doors and pairs of 4'x8' with F90KR keyed removable Mullion
- Meets ADA requirements
- UBC 97, Standard 7-2 and UL10C for positive pressure
- ANSI/BHMA certified A156.3
- Meets NFPA 80 & 101 for Life Safety
- Miami-Dade County, Florida NOA 13-0228.11 EXP. 04/27/15
- State of Florida Approval FL9052
- California State Fire Marshall - 4140-0127:105 and 3725-0127:105

Detex Limited Warranty

10 Year Mechanical/3 Year Electrical Limited Manufacturer's Warranty

Where Trust is Built™
DETEX®
Life Safety, Security and Security Assurance

Detex Corporation
302 Detex Drive
New Braunfels, Texas 78130-3045 USA
PH. (830) 629-2900
(800) 729-3839
FAX (830) 620-6711
(800) 653-3839
http://www.detex.com
USA Sales:
marketing@detex.com
International Sales:
export@detex.com

June 17, 2014

REV	DESCRIPTION	DATE
.	.	.
.	.	.

PalmSHIELD

GATE HARDWARE DETAILS
WIRE MESH INFILL
GATE HARDWARE DETAILS
FINISH TO BE DETERMINED

PALMSHIELD PROJECT #: .		CLIENT PROJECT #: .			
REFERENCE JOB #: .					
CHKD BY: . .	SCALE: N.T.S.	DRAWN BY: PB	DATE: 07/25/2023	REV .	SHEET # 06