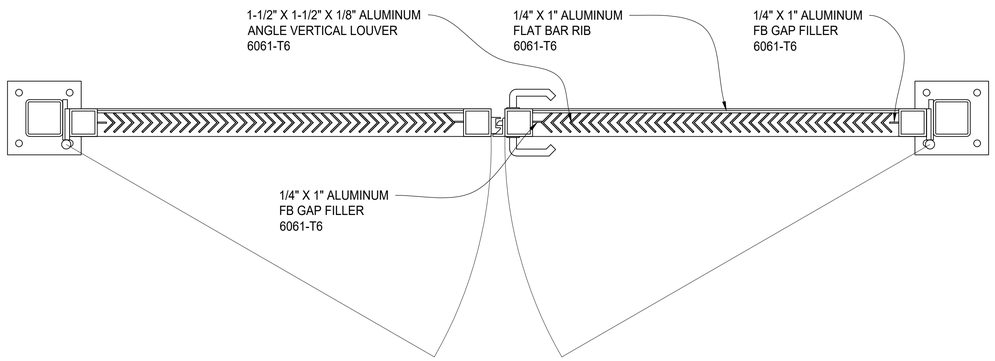

PLAN VIEW

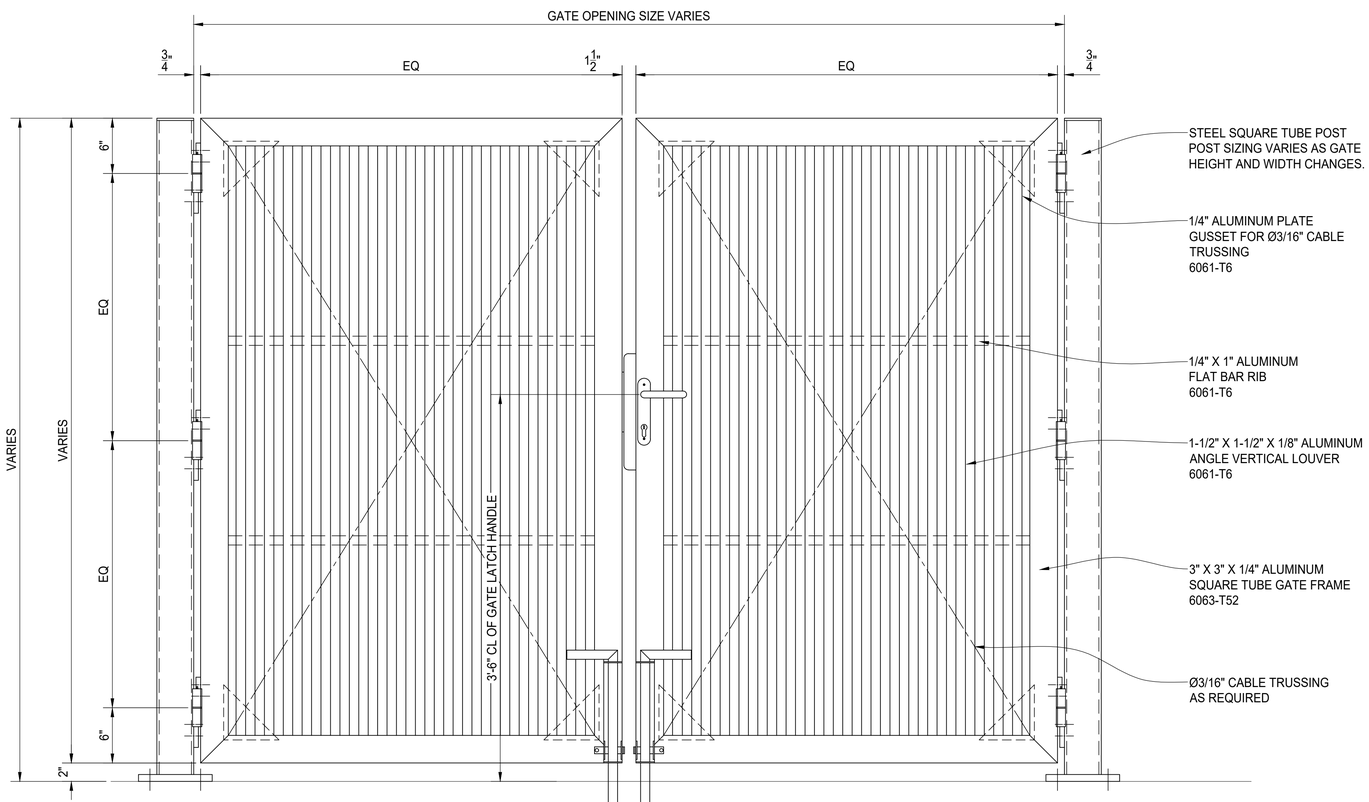

GATE ELEVATION

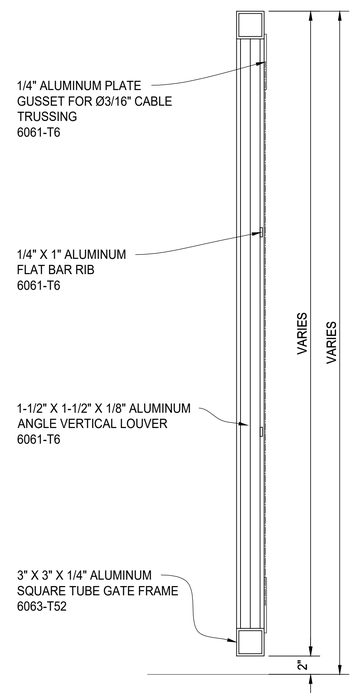

TYPICAL GATE SECTION

REV	DESCRIPTION	DATE
.	.	.
.	.	.

PALMSHIELD ELITE - PATENT PENDING
VERTICAL ANGLE LOUVER D.D. GATE
PLAN, ELEVATION AND SECTION VIEWS
FINISH TO BE DETERMINED

PALMSHIELD PROJECT #: PS24-0001		CLIENT PROJECT #: .	
REFERENCE JOB #: .			
CHKD BY: AF TL	SCALE: N.T.S.	DRAWN BY: PB	DATE: 06/14/2024
REV .	SHEET # 01		